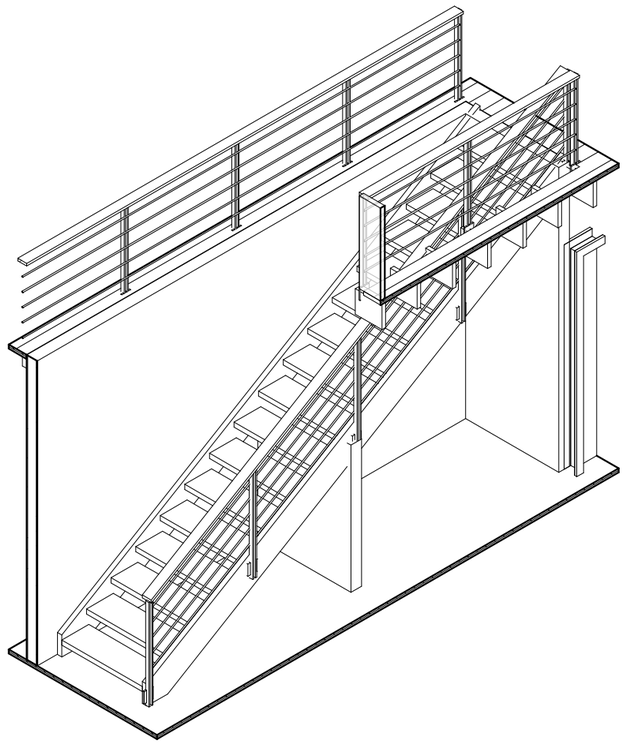

1 STAIR ISOMETRIC

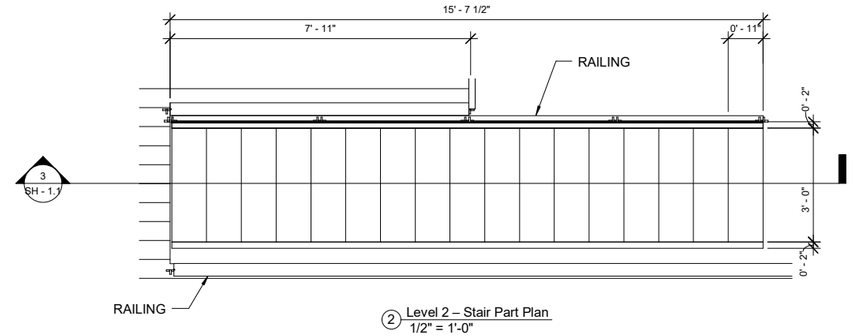

2 Level 2 – Stair Part Plan
1/2" = 1'-0"

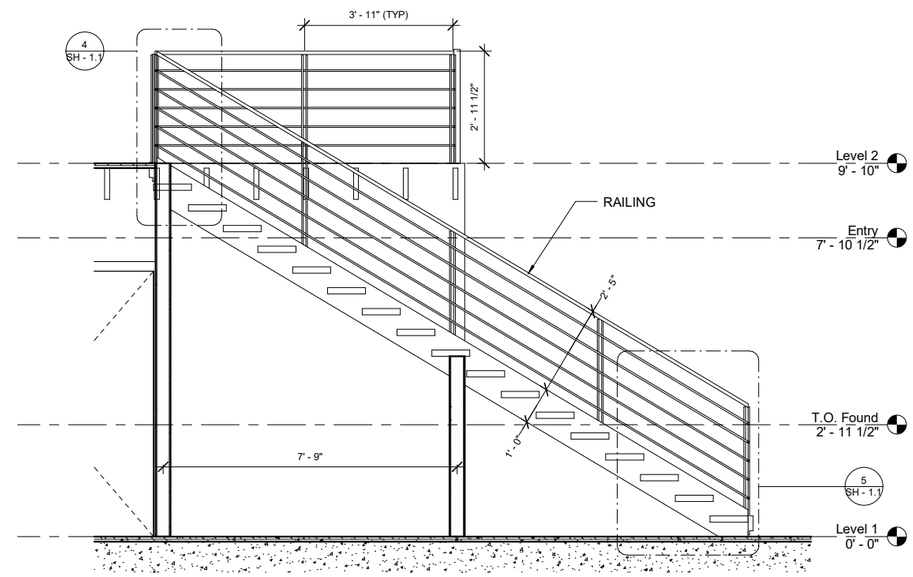

3 STAIR SECTION
1/2" = 1'-0"

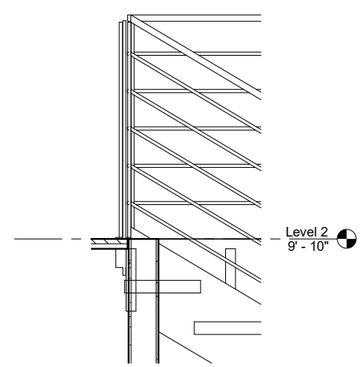

4 Stair Railing Detail @ Top
1" = 1'-0"

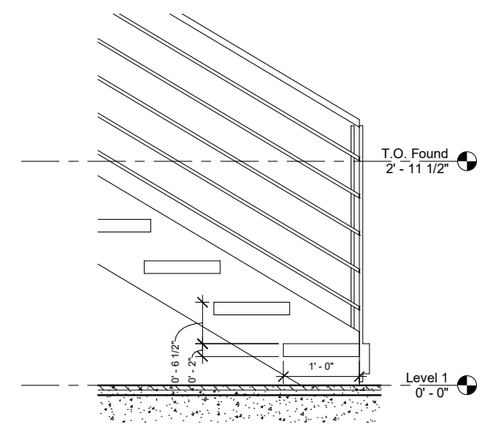

5 Stair Railing Detail @ Bottom
1" = 1'-0"

AUTODESK.

www.autodesk.com/revit

Consultant
Address
Address
Phone
Fax
e-mail

Consultant
Address
Address
Phone
Fax
e-mail

Consultant
Address
Address
Phone
Fax
e-mail

Consultant
Address
Address
Phone
Fax
e-mail

Consultant
Address
Address
Phone
Fax
e-mail

No.	Description	Date

Owner

Project Name

STAIR

Project number	Project Number
Date	Issue Date
Drawn by	C. Medina
Checked by	Checker

SH - 1.1

Scale	As indicated

9/12/2018 12:11:43 AM

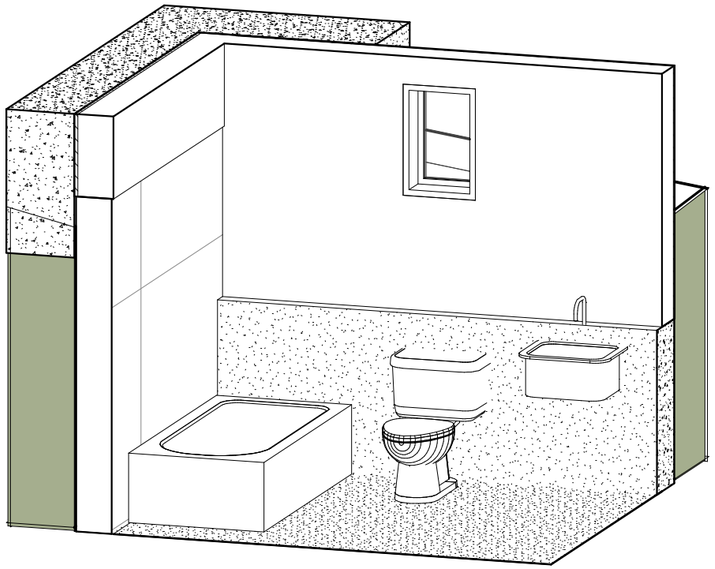

1 BATHROOM ISOMETRIC

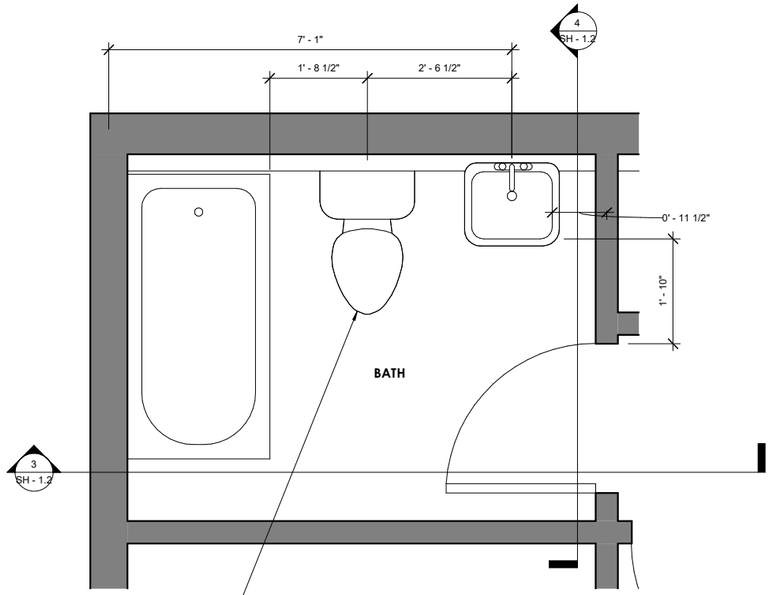

2 BATHROOM - PLAN
3/4" = 1'-0"

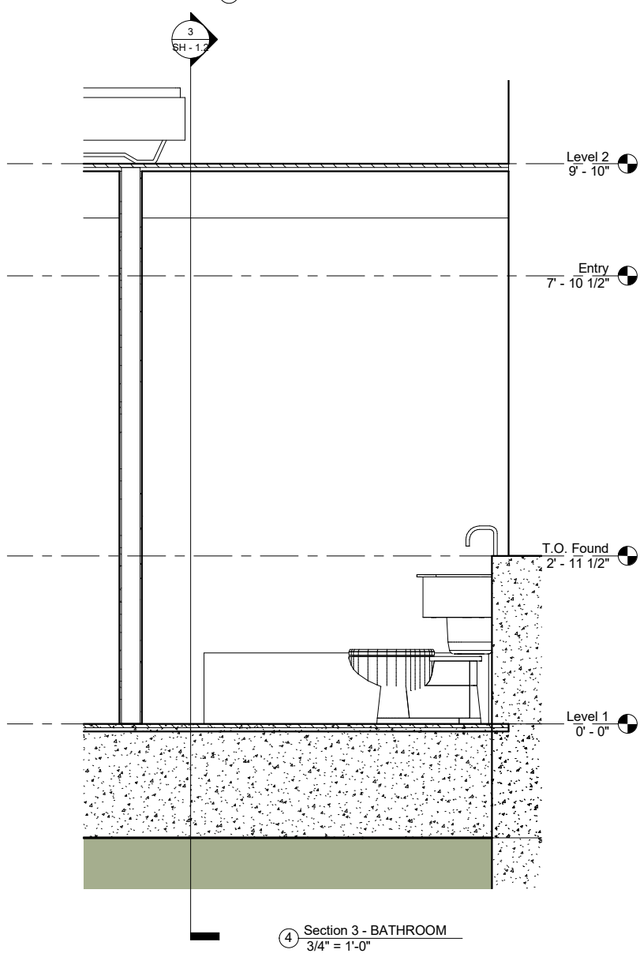

4 Section 3 - BATHROOM
3/4" = 1'-0"

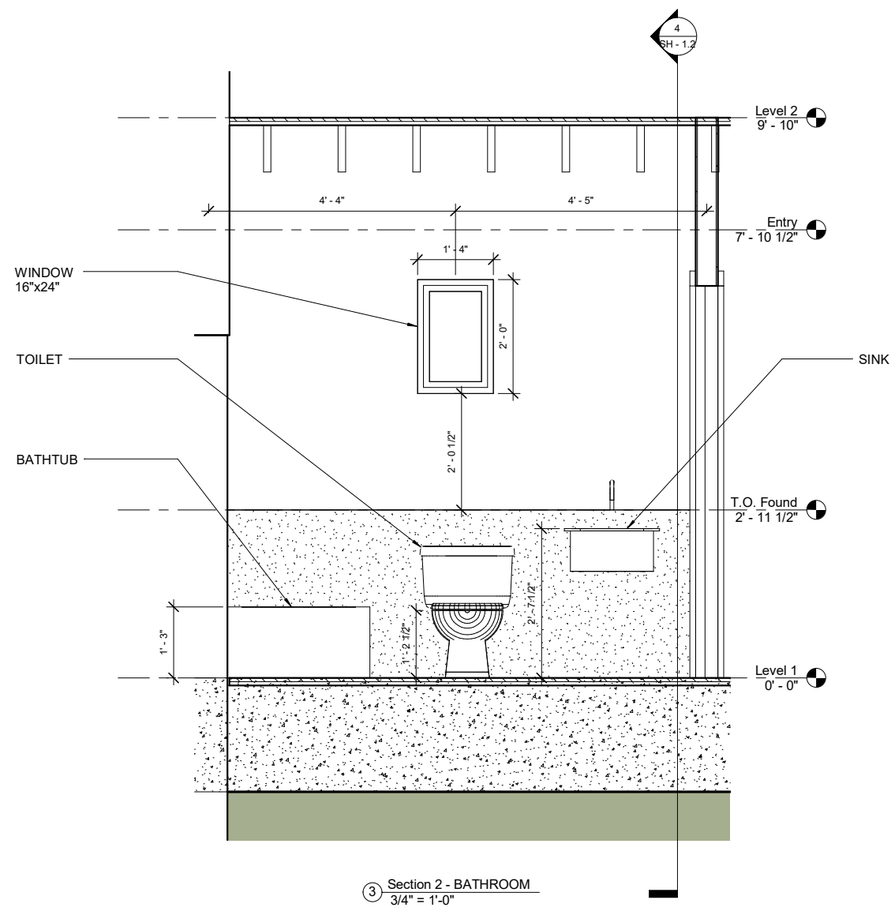

3 Section 2 - BATHROOM
3/4" = 1'-0"

AUTODESK.

www.autodesk.com/revit

Consultant
Address
Address
Phone
Fax
e-mail

Consultant
Address
Address
Phone
Fax
e-mail

Consultant
Address
Address
Phone
Fax
e-mail

Consultant
Address
Address
Phone
Fax
e-mail

Consultant
Address
Address
Phone
Fax
e-mail

No.	Description	Date

Owner

Project Name

BATHROOM

Project number	Project Number
Date	Issue Date
Drawn by	C. Medina
Checked by	Checker

SH - 1.2

Scale	3/4" = 1'-0"

9/12/2018 12:11:45 AM

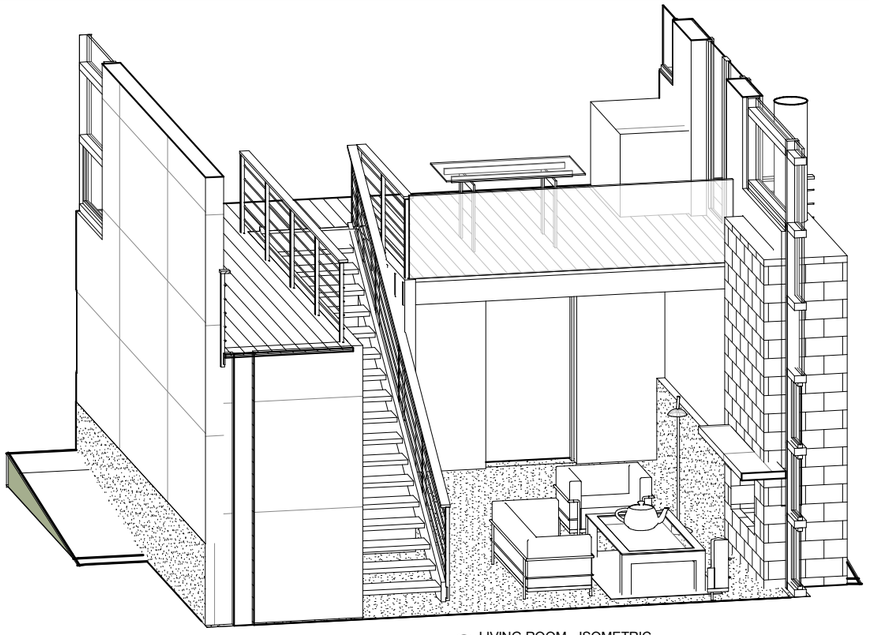

1 LIVING ROOM - ISOMETRIC

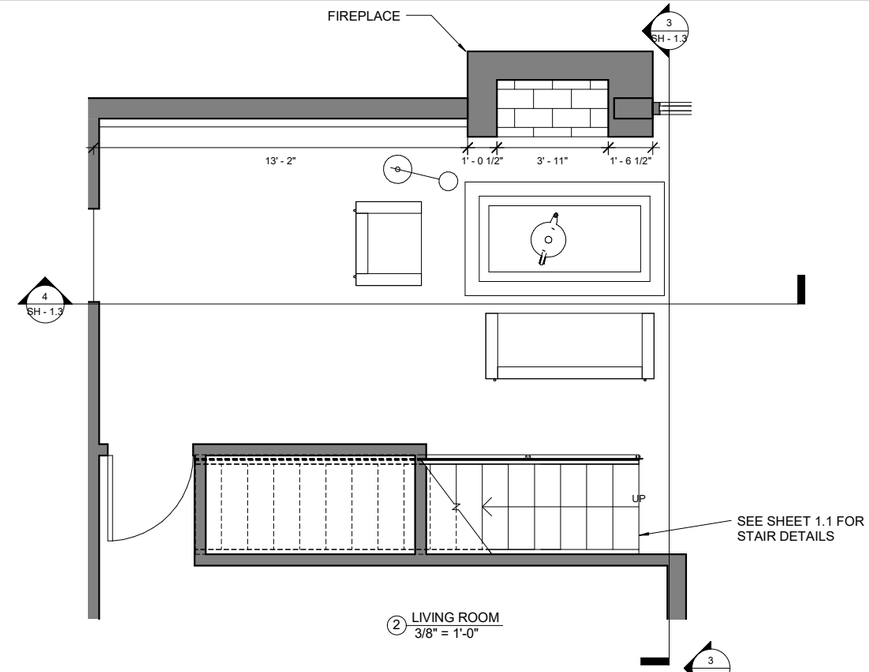

2 LIVING ROOM
3/8" = 1'-0"

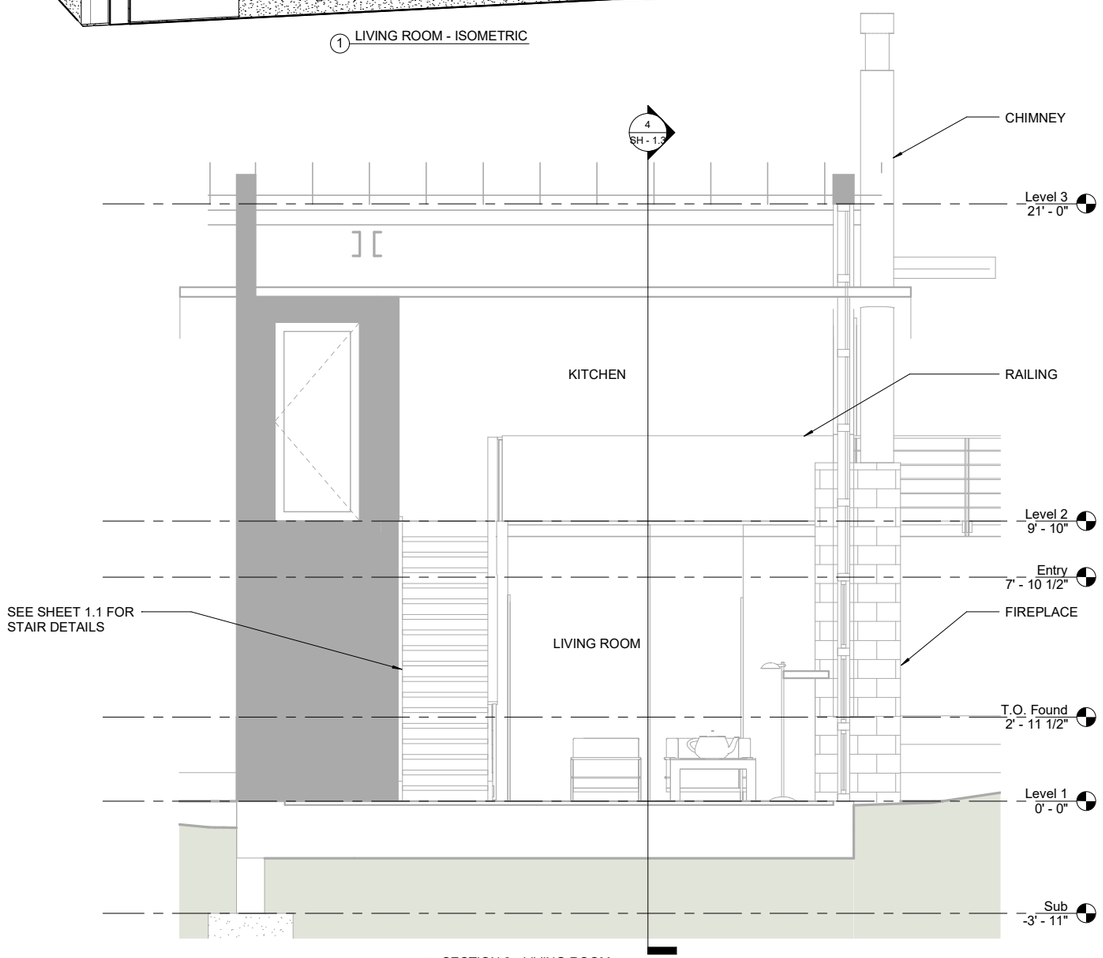

3 SECTION 3 - LIVING ROOM
3/8" = 1'-0"

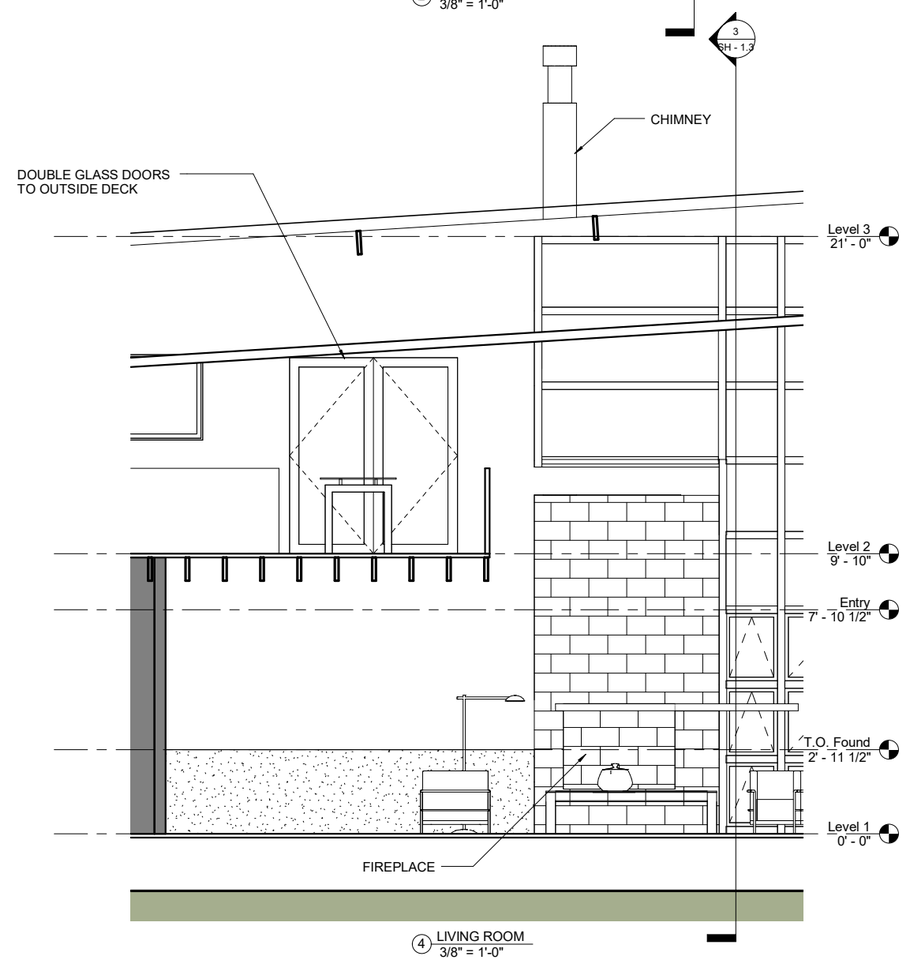

4 LIVING ROOM
3/8" = 1'-0"

AUTODESK.

www.autodesk.com/revit

Consultant
Address
Address
Phone
Fax
e-mail

Consultant
Address
Address
Phone
Fax
e-mail

Consultant
Address
Address
Phone
Fax
e-mail

Consultant
Address
Address
Phone
Fax
e-mail

Consultant
Address
Address
Phone
Fax
e-mail

No.	Description	Date

Owner

Project Name

LIVING ROOM

Project number	Project Number
Date	Issue Date
Drawn by	C. MEDINA
Checked by	Checker

SH - 1.3

Scale	3/8" = 1'-0"

9/12/2018 12:11:47 AM