11/2/2014

Objective: Further research on the parts needed to begin putting the Arcade Controller together. Including which Arduino model would work best.

Materials: Computer

Methods: Looked at several sites that offered electronics for game consoles. Shipping time and cost will be a factor of Course

Information Sites:

http://www.slagcoin.com/joystick/introduction.html <------ BEST SITE FOR INFORMATION!
http://arcadecontrols.com/arcade.htm

Sellers

http://shop.xgaming.com/
http://www.ultimarc.com/
http://gameroomsolutions.com/
Ebay.com
Amazon.com

Results: I decided that I wanted a LED lit arcade kit so I bought two LED arcade buttons from Ebay to begin testing with Arduino coding and the Arduino Mega 2560 board. Speaking with my partners and anticipating needs I've decide to add switches to control possible features such as oscillators and filters.

11/5/2014

Objective: To find a kit with the components that I need type of switches to use and any additional materials needed and order it as time is running out

Materials: Computer, LED Buttons

Methods: I showed Prof. Baker some of the components I was looking at and he suggested which ones would be a good fit for the project.

Results: I found that the company that shipped my buttons also sent a 10% off their website orders so I used www.gameroomsolutions.com since they are U.S based and shipped promptly. Placed the order for an LED Arcade button kit $62.08. Also ordered 5 SPDT switches from amazon and ebay $8.00 both.

11/7/2014

Objective: Test LED ights and buttons, order a new Arduino board.

Materials: Computer, Arduino Mega, LED Buttons

Methods: Consulted with my team mate Darya the previous day as to what code to use on the buttons so that when pushed the buttons would turn on and off. Also consulted with Prof. Baker and after showing him a picture of the kit ordered he concluded that the Arduino ADK would be a better board for the project.

Data: Code Used

```
/*
  Button
// constants won't change. They're used here to
// set pin numbers:
const int buttonPin = 3;     // the number of the pushbutton pin
const int ledPin =  46;      // the number of the LED pin

// variables will change:
int buttonState = 0;         // variable for reading the pushbutton status

void setup() {
  // initialize the LED pin as an output:
  pinMode(ledPin, OUTPUT);
  // initialize the pushbutton pin as an input:
  pinMode(buttonPin, INPUT);
}

void loop(){
  // read the state of the pushbutton value:
  buttonState = digitalRead(buttonPin);

  // check if the pushbutton is pressed.
  // if it is, the buttonState is HIGH:
  if (buttonState == HIGH) {
    // turn LED on:
    digitalWrite(ledPin, HIGH);
  }
  else {
    // turn LED off:
    digitalWrite(ledPin, LOW);
```

Results: When I was working with the code I decided that I wanted the LED to turn the light on when pressed as opposed to having a light on all the times. So Button state was changed from “LOW” to “HIGH” and the LED pin line from “LOW” to “HIGH”

11/11/2014

Objective: To find out what is going on with my order. The order was shipped Nov 8th yet it has not been received. Tracking was not provided by the seller'

Results: Received a reply from the website tracking information was not given until today. Turns out package had an attempted delivery and has been sitting in the post office. Redeliver scheduled through USPS site. Tracking Number: 9410809699937025471016

11/15-11/19

Objective: To recover package from the post office Saturday deliver never happened as schedule through USPS.

Methods: Emailed the seller to inform them that the package could not be found at USPS and send replacement. 11/18 Made a complain on Ebay, seller suddenly very responsive but would not reship.

Results: Post office could not find my package, seller unresponsive and uncooperative. No progress on pkg made. 11/19 on a whim went to the post office in the A.M my package magically appeared!!!

11/19-20/2014

Objective: To begin work putting the arcade controllers together. Identify parts and -/+ pins.

Materials: Project components: Button, Lamp Harness, LED Light, Screw Cap, Switches

LED Molex Connector, 2 Videos, continuity tester

Methods: I began by drawing the parts by hand on a notebook and labeling them as I watched the instructional videos. I also labeled the joystick wires according to the seller's description. See pictures below for a quick summary of the buttons Molex connectors and wire harness for the joystick. To verify negative and positive I used a continuity tester.

Data:

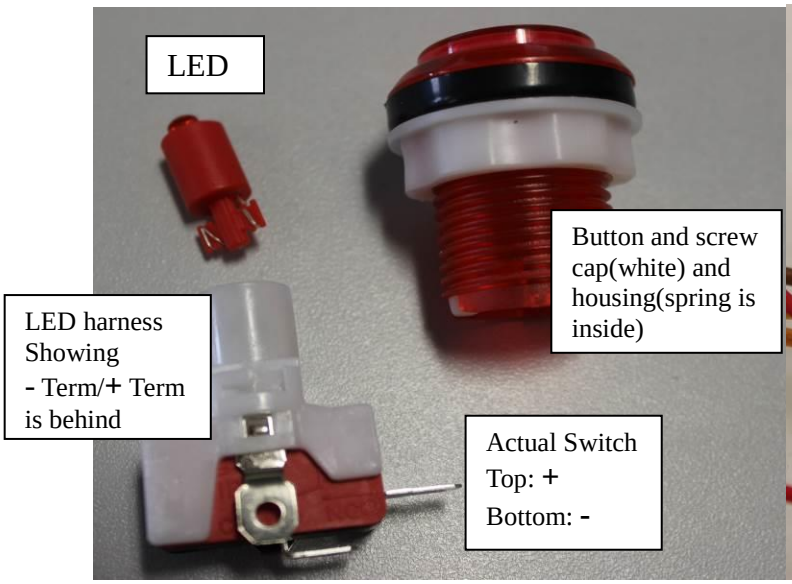

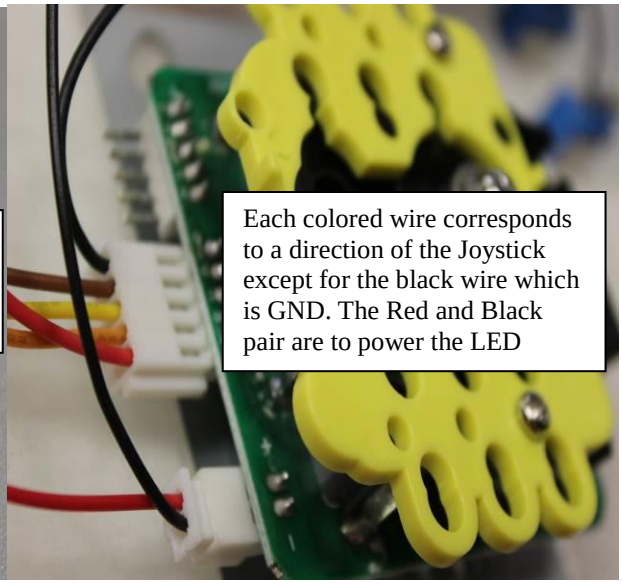

Results: I managed to map out the components signal flow and can begin thinking of build a casing and what additional wiring and soldering I can do. Also the inventory seems complete. The package

included wiring harnesses for both your signal of the switch and power to the LED. I also save the videos in my computer in case I didn't have internet available which can be found on yo tube by searching the *gameroomsolutions*.

11/24-25/2014

Objective: To design and build a casing for my project (otherwise wiring becomes a nightmare and very confusing) also our team will meet to discuss what buttons and switches we might possibly need.

Materials: Tape measure, Caliper, paper pencil, AutoCAD, my teammates, PC, internet

Methods: My teammates were not really up the designing phase yet but from the sound of it I had more than enough buttons to accommodate what they already had. I decided to start designing my case with minimum buttons in mind. I began by searching thingiverse.com and found a CAD drawing of a joystick surface here (http://www.thingiverse.com/thing:29363) Pic below. I began trying to design it but then realized I needed to take some measurements so I used a tape measure and a caliper to map out my button placement and screw positions. I went as far as 4 decimal places to ensure accuracy.

Data: The buttons were my main concern since I need to make 2 levels of "seating" for the bottom flanges. The lower flange measurement was 1.050in. round the lower threaded part was 0.9195in. round. Screw holes 1/8in distance to middle Width 5.5in. The casing dimensions were L 9.8in W 5.5in H .5in I had to accommodate the 5th Gen Replicator which had a larger print area.

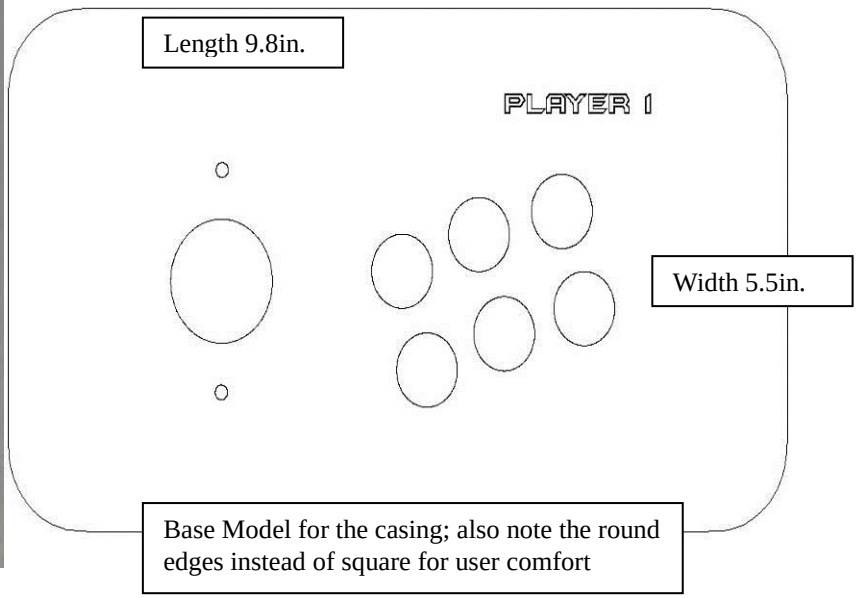

Results: It's not easy designing a case for my project considering the limitations of the 3D printer. Also much more measurements need to be taken into consideration designing took a back seat to gathering data, also decided to have as many buttons and switches as possible since it's better be over than under.

<u>11/26-11/30</u>

Objective: To finish designing and begin printing the case to my controller.

Materials: PC, Auto Cad, button layout samples

Methods: took additional measurements such as the circumference of the threads for the switches and how far to place the joystick from the buttons. I began by adjusting my the model in 2D by length and width as well as the button and joystick distance from the button. Button separation and curvature were overlaid on a pre-printed model from http://www.slagcoin.com then adjusted to the size of the actual buttons. I then began to work in 3D CAD space and ideas came such as making slots for the metal plate of the joystick and turning the top of the case into a lid as oppose to one deep casing therefore having easy acces to the electronics. I chose clear filament so that the LED's could show more when they are lit.

Results: The design was a success although it took me well over 5 hours since I'm not very good with AutoCAD 3D. More time consuming was the printing process. Luckily some of my classmates were around and told me what files to export form CAD and such. I didn't have any ide how to use the printers but it wasn't until a few failed attempts and staying late to reprint my piece that I jumped in and began playing with the Makerbot software and got really familiar with the basic aspects of the Makerbot such as converting files, changing filament and leveling the tables. Due to the fact that it was a lid IT HAD TO BE PRINTED UPSIDEDOWN! Actual Printing time was 9 hours

Here is how the lid came out.

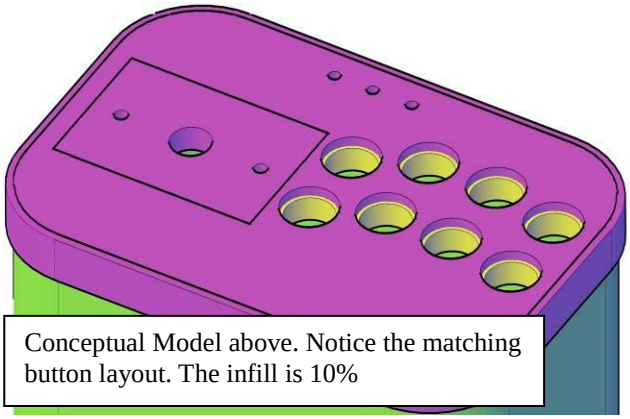

Conceptual Model above. Notice the matching button layout. The infill is 10%

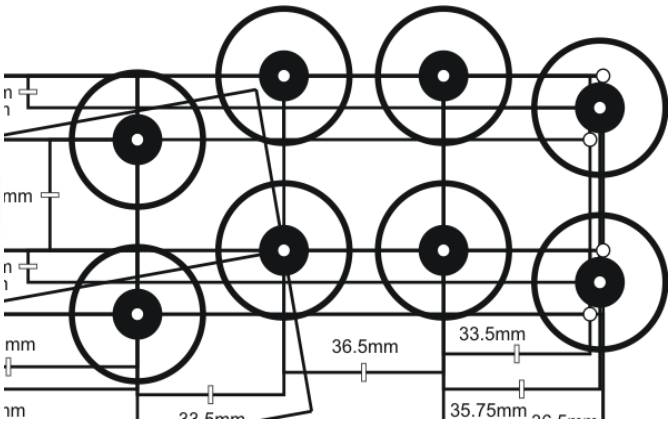

I don't have any pictures of the case without the buttons.

<u>12/2-4/2014</u>

Objective: Putting all the components together into the lid and possibly wiring it.

Materials: Printed Lid, Dremmel, buttons, joystick, wiring harnesses, patience

Methods: I had to use a dremmel in order for my buttons to fit since I used exact measurements, The process took about an hour since I had to use the dremmel at its lowest setting and a fine grit attachment so as not to make the holes too big where they buttons would not be supported by the lower flange. In addition the holes were the joystick was to be mounted were off by a ¼" too close to the base. Reason being that in CAD I measured the distance from middle to middle of the center hole and screw holes but in reality I was measuring front the edge of the joytstick to the middle of the screw hole, also the holes were too big for the screws to catch the thread so in this case an exact or smaller diameter would have been helpful. Also I wanted to make a seat for the screws as well but the holes were too small

Data: about 5hrs. Spent on modification and finding replacement for the screws but better faster than reworking my CAD drawing and waiting for a reprint in 9 hours

Results: I was able to fit the buttons just fine and maintain the integrity of the case. For the screws I had to drill new holes and found 1/8" bolts with plastic nuts that were able to fasten the joystick, I attempted to use a countersink to flush the bolts to the case but due to the honeycomb infill it degraded the integrity of the casing but I did manage a slight sink in bolts. The switches easily screwed in alone. Due the time spent on modifications I could not complete the wiring. SEE THE PREVIOUS ENTRY for a picture of the case.

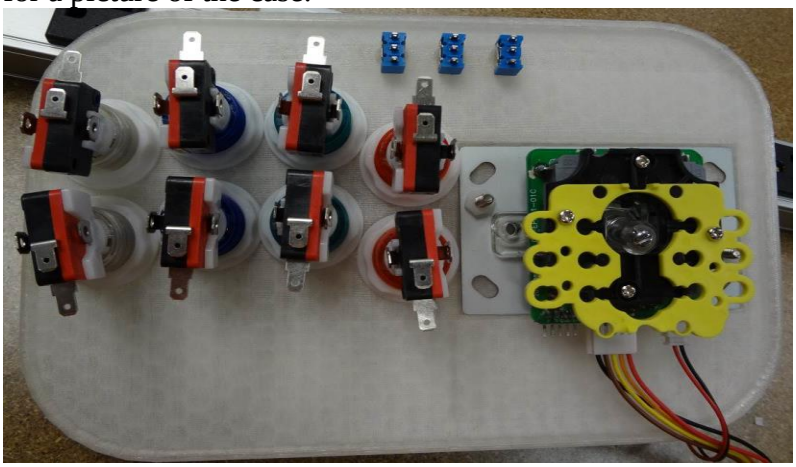

<u>12/10-16/2014</u>

Objective: To complete wiring on my project, 3D print lower half of the case and test my project**.**

Materials: PC, USB cable, wiring harnesses, Lid with buttons, game controller interface, schematic, continuity tester lots of patience, Prof. Baker**,** videos

Methods: Sat with Prof. Baker during his office hour to help me wire and test my controller. It was not an easy or quick process; the schematic provided for the chip was written backwards. Using the continuity tester we were able to establish with certainty which pin was ground. What saved a lot of time was that the video showing the PC automatically detected the controller chip as a game controller so we could test and see what was being pushed when buttons were connected. As far as the harnesses go they were pretty easy to assemble and very little soldering was required. Basically the Yellow and

Black harnesses with the golden thicker connectors were for LED power only. While the switches wiring were smaller and silver color. Each had a separate ground which went into the controller chip itself; the LED required a separated 12V power source. The 3 SPDT switches were wired to the chip via the harness and shared the ground these required soldering.

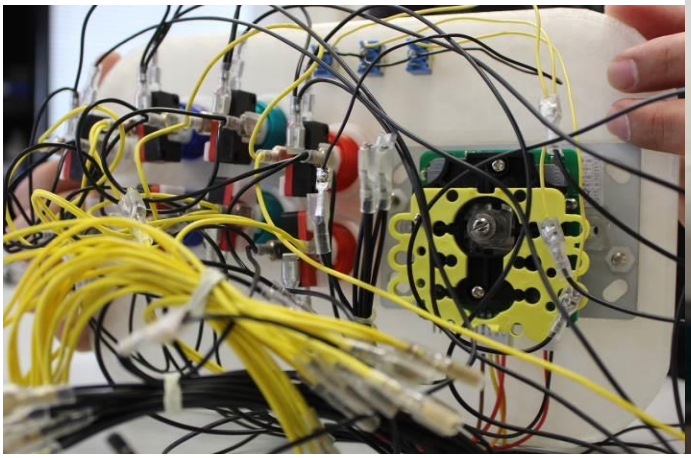

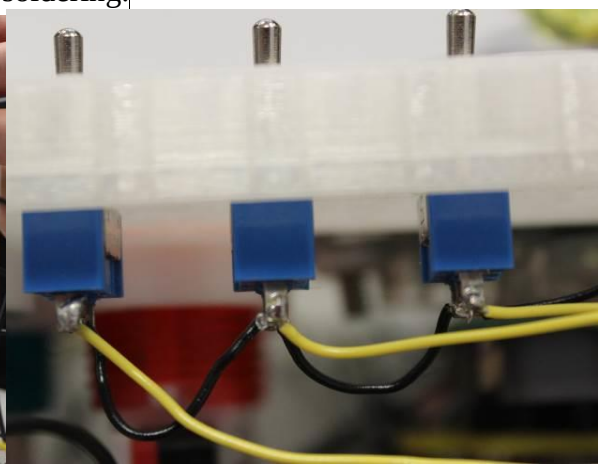

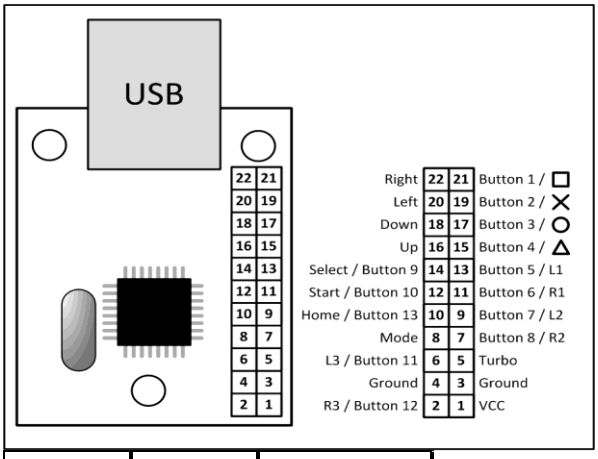

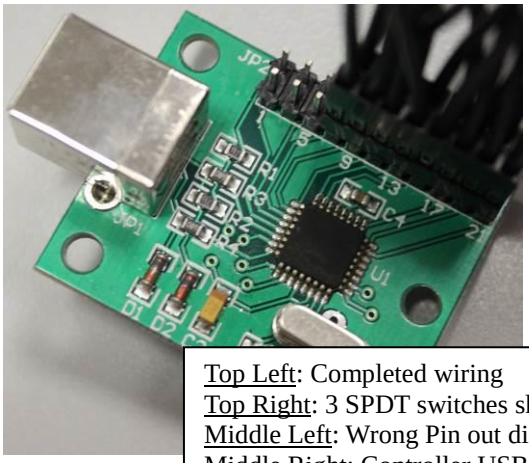

Top Left: Completed wiring
Top Right: 3 SPDT switches sharing the same ground
Middle Left: Wrong Pin out diagram
Middle Right: Controller USB interface
Button Left: Actual Pin out Table (notice numbers are reversed from the schematic)
Bottom Right: SPDT switch with a 12v 1.0A power supply for LED power. Glue gun was used to cover the contacts

Pin	Button	Assigment
1		VVC Power
2		
3		Ground
4		Ground
5		Not Used
6	Turbo	Not Used
7	Mode	Not Used
8	8	
9	13	Switch 3
10	7	
11	10	Switch 2
12	6	
13	9	Switch 1
14	5	
15	Up	Brown Wire
16	4	
17	Down	Yellow Wire
18	3	
19	Left	Orange Wire
20	2	
21	Right	Red Wire
22	1	

Methods (Fabrication): I was able to create the bottom part of the casing in AutoCAD, the case contained slots for both the Arduino and the Interface chip, also holes were made to have easy access to

the USB ports for both chips and another hole for the motion sensor that I wanted to include to trigger the lights to flash randomly, however the Replicator constantly jammed. I also cut a 5degree diagonal slope to give a little bit of an ergonomic feel in your hands. I had about 8-12 failed attempts. I tried to change the shell density up and down, building it in combinations of with rafts and supports yet it would still jam. Ultimately I asked Prof. McCullough for help and he suggested I print the bottom separately from the body of the casing, this worked a lot better. The issue also was that the 5Gen Replicator had to be calibrated a few times before it could print my project. I was able to begin the printing of the bottom of the case in two parts on the Replicator 2; unfortunately it was not ready for final presentation day once I got it to print late at night and the casing took 26 hours to print.

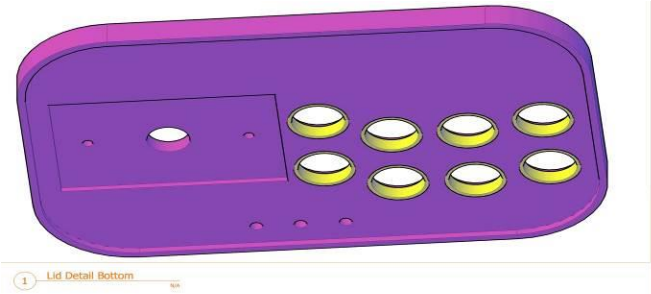

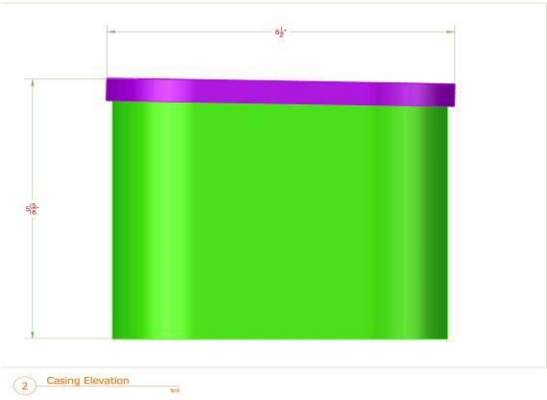

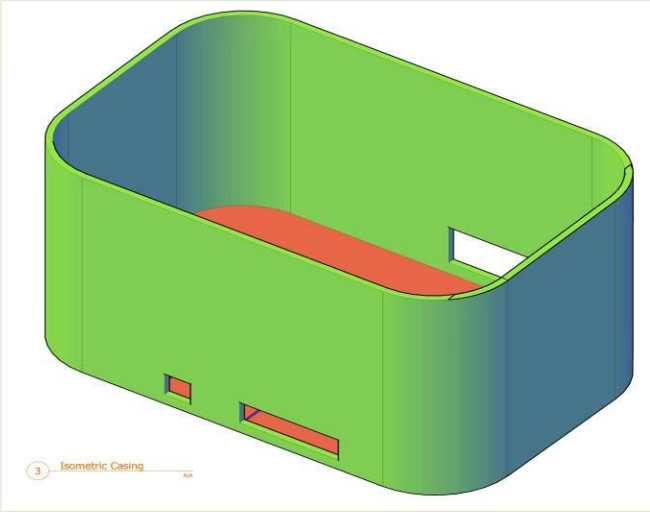

Results: SEE FOR YOURSELF!

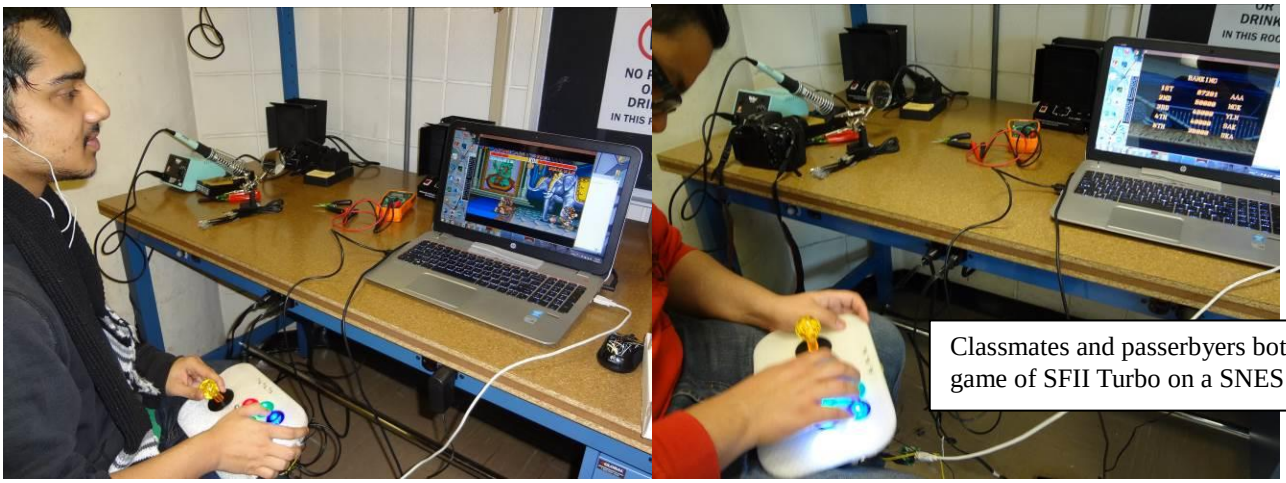

Classmates and passerbyers both enjoyed a game of SFII Turbo on a SNES emulator

Although we never got to integrate our projects together each of my teammates **(shout out to Sam and Darya!)** our projects were successful on their own and we were pretty happy with the results.

Final Report 12/20/2014

Objective: Show a semi complete version of my project.

Materials: The Project, camera

Methods: I took pictures of the case with Led light up in the dark and the casing together with the electronics. I also took pictures of some of the Replicator defects on the printed parts. I used a 7% infill to speed up the printing process and added a raft so It would stabilize the bottom since one of the issues might have been that the plastic cooled to quickly and came off the printer surface

Results: I made a minor mistake when designing the case which was making it the exact same size as the inside of the lid when I should have made it slightly smaller so I could fall into place. Also I should have done a 10-15 degree cut as the printer did not define the 5 degree slope very well, I didn't account for the additional power supply and switch so holes may be frilled for those. I made casing 1/8" thinking on minimizing print time but the case was a bit wobbly and flexible.

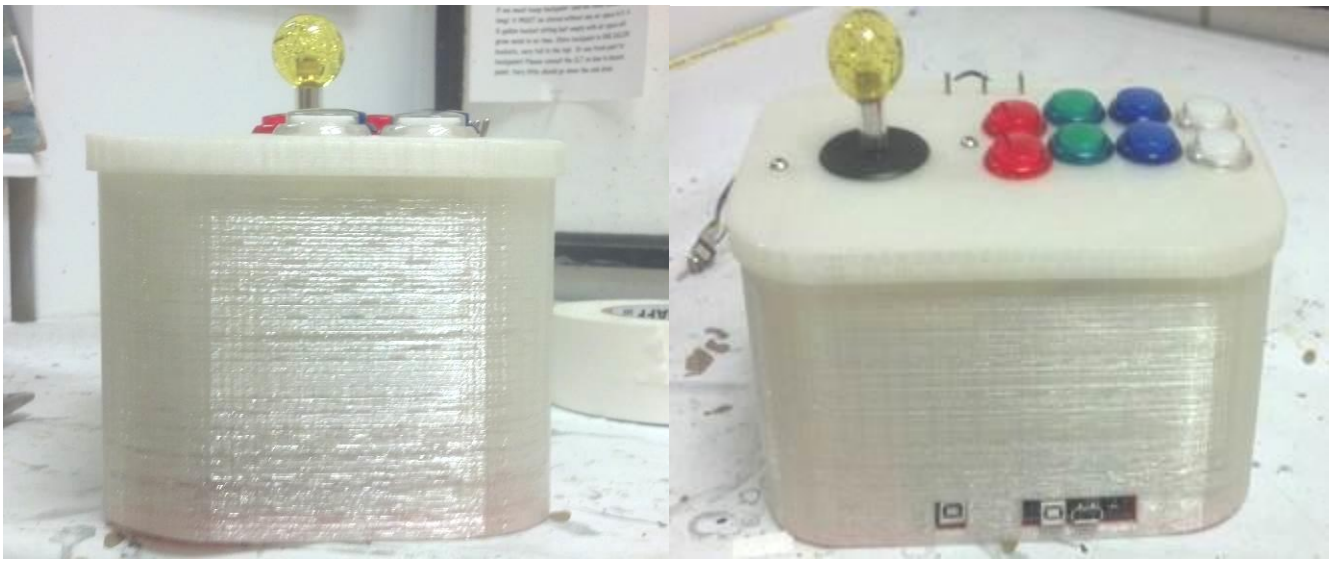

- Below are some defects that came from the 3D Printing, these parts were slightly below the print areas limits a good guess is that due to the relatively coverage large area it may have cooled too quickly. Upon returning to create another case I would like to experiment with the CNC router.

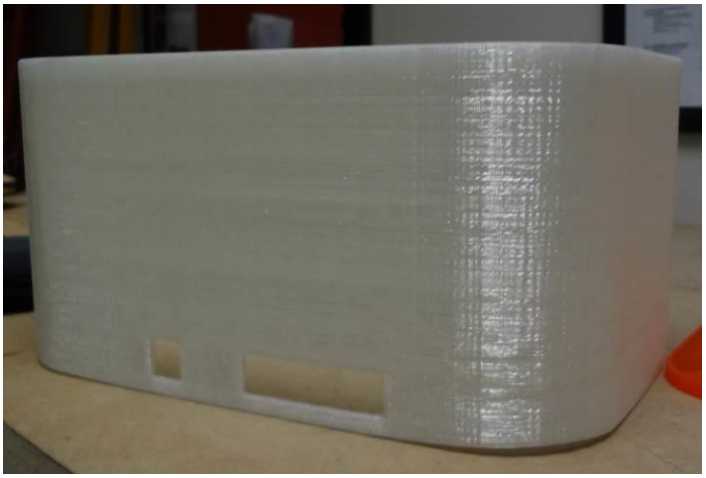

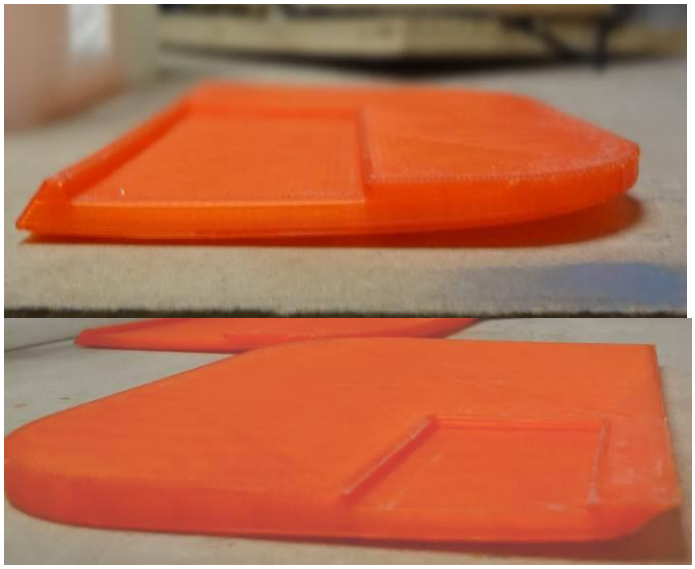

Top Left: Body of the casing, notice the right corner is bent.
Top Right: Slotted to fit the Arduino notice bending on the right side.
Button Right: Slotted to fit the controller USB interface notice the bending on the right and the curving of the 45 angle, I should have used supports