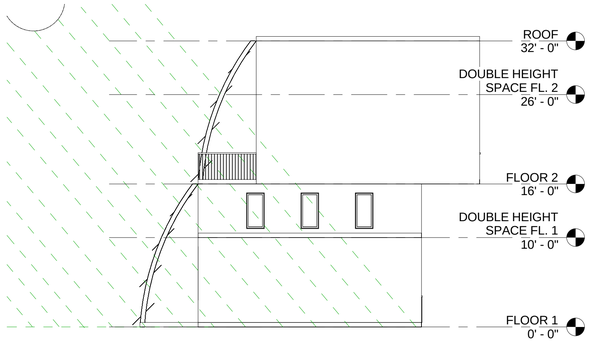

1 Panel Angel Solestice - 50 Deg.
1/8" = 1'-0"

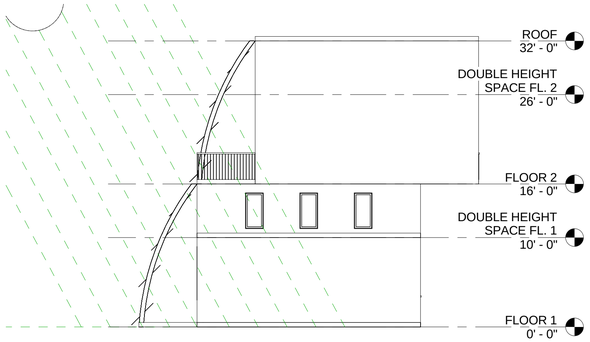

2 Panel Angle Summer - 62 Deg.
1/8" = 1'-0"

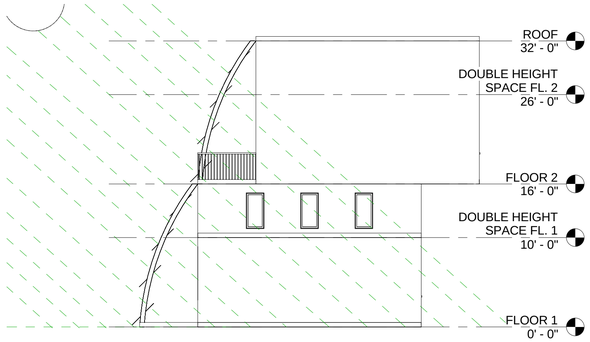

3 Panel Angle Winter - 35 Deg.
1/8" = 1'-0"

NOTES: DEPENDING ON TIME OF YEAR, PENLS MUST BE ANGLED PERPENDICULAR TO ANGLES NOTED ABOVE. PANEL ANGLE DEPICTED IN DRAWING IS NOT ACCURATE

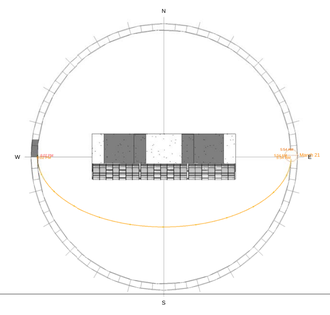

4 03.21.14

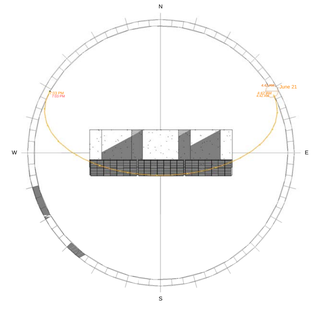

5 06.21.14

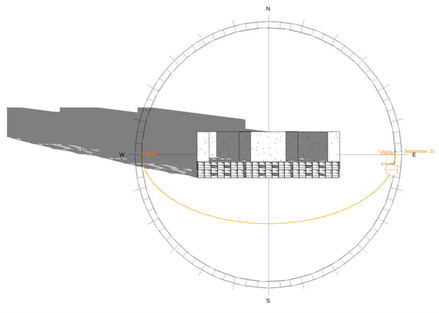

6 09.21.14

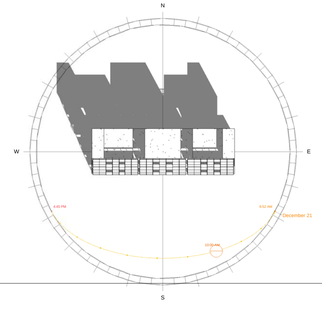

7 12.21.14

Autodesk® Revit®

www.autodesk.com/revit

Consultant
Address
Address
Phone
Fax
e-mail

Consultant
Address
Address
Phone
Fax
e-mail

Consultant
Address
Address
Phone
Fax
e-mail

Consultant
Address
Address
Phone
Fax
e-mail

Consultant
Address
Address
Phone
Fax
e-mail

No.	Description	Date

ARCH 3610

ADV. DETAIL STUDIO

Sun Sheet

Project number	6
Date	03.08.13
Drawn by	Author
Checked by	Checker

A107

Scale	1/8" = 1'-0"

4/7/2014 10:02:43 AM