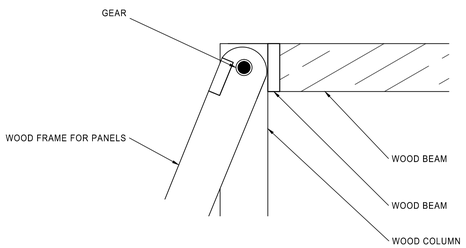

A PV FRAME DETAIL
1" = 1'-0"

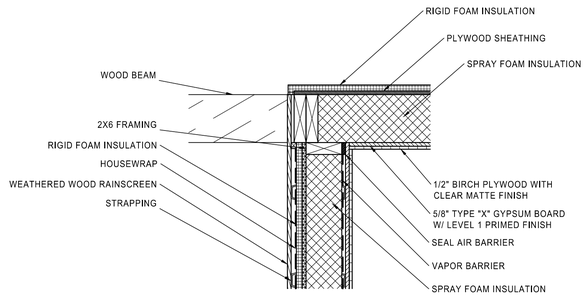

C WALL MEETS ROOF DETAIL
1" = 1'-0"

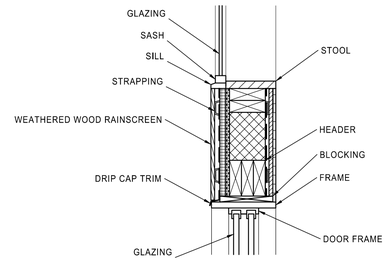

E DOOR HEADER DETAIL
1" = 1'-0"

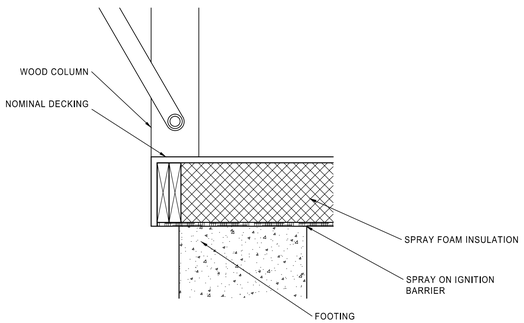

B DECK DETAIL
1" = 1'-0"

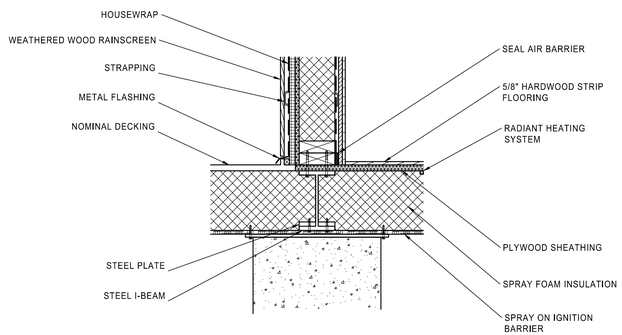

D WALL MEETS FLOOR DETAIL
1" = 1'-0"

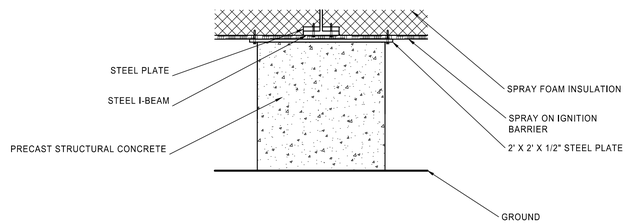

F FOOTING DETAIL
1" = 1'-0"

ARCH 3630
PROF.: APTEKAR
ASSIGNMENT MT

ETUDES:
OLIVIER DE MARC

INGENIEUR:

MAITRE D'OEVRE:

MAITRE D'OUVRAGE:

AUTRE:

REVISION:

DATE	EMISSION

TIMBRE:

CARTE:

DESSIN:
CALLOUT DETAILS

PROJECT NO.:

NOM DE FICHIER:

ECHELLE AM.: 1" = 1'-0"

DESSIN NO.	AREA	PAGE
A-03		7 DE 8