The City College Of Technology
ARCH 3630- Advanced Detailing Studio
PROF. Aptekar

Michelle Yang
Date: 02/20/2014

Assignment #6

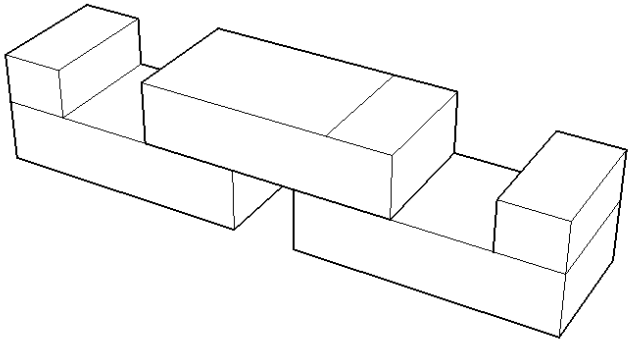

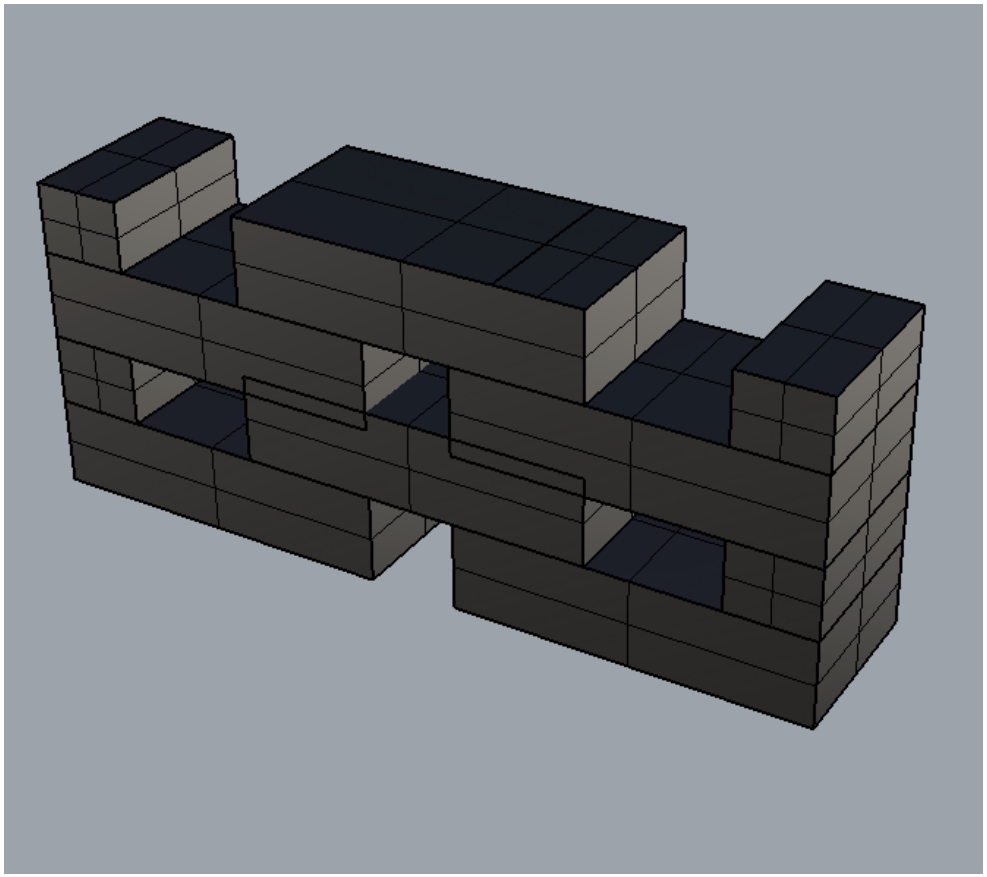

The City College Of Technology
ARCH 3630- Advanced Detailing Studio
PROF. Aptekar

Assignment #6

Michelle Yang
Date: 02/20/2014

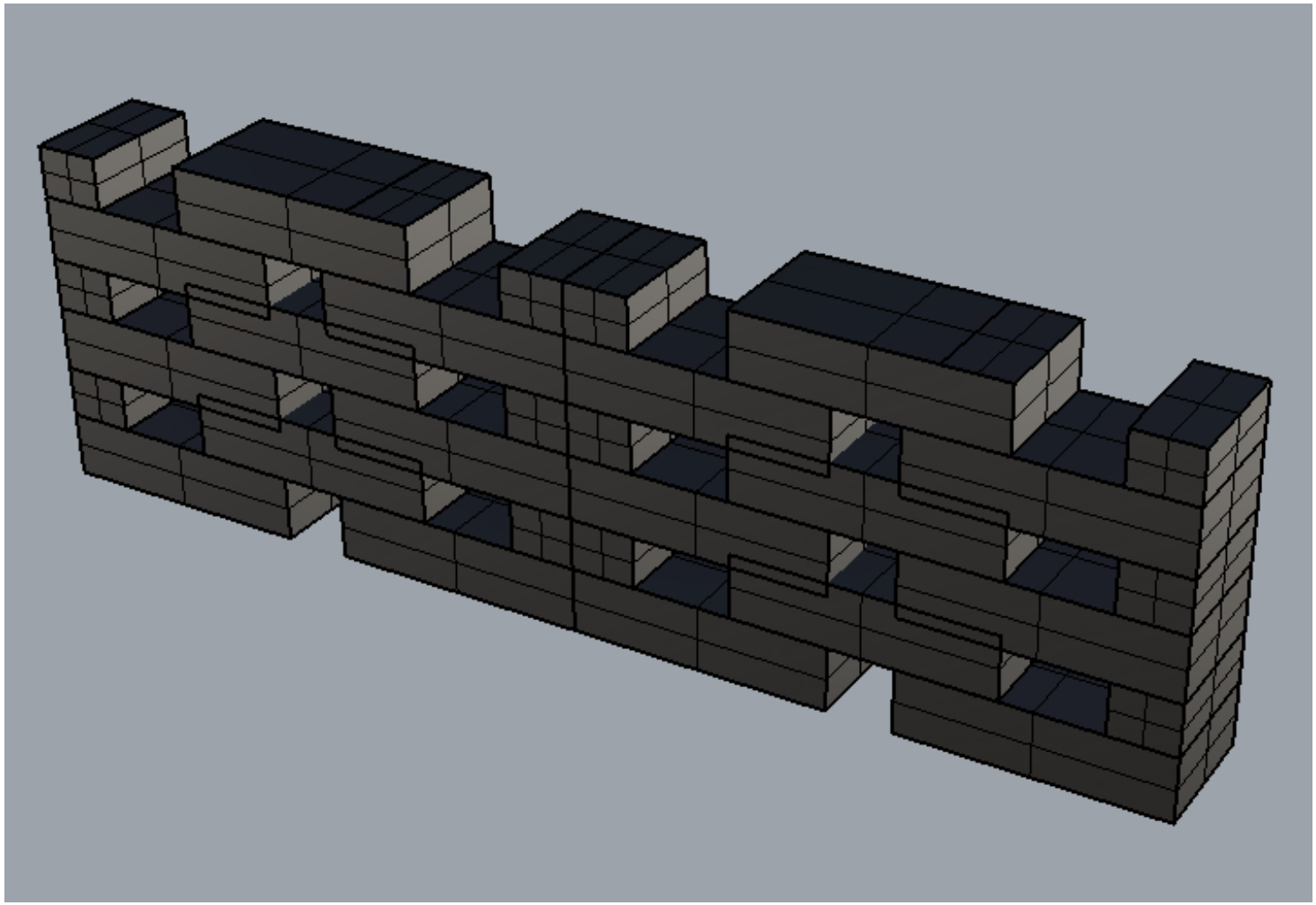

The City College Of Technology
ARCH 3630- Advanced Detailing Studio
PROF. Aptekar

Assignment #6
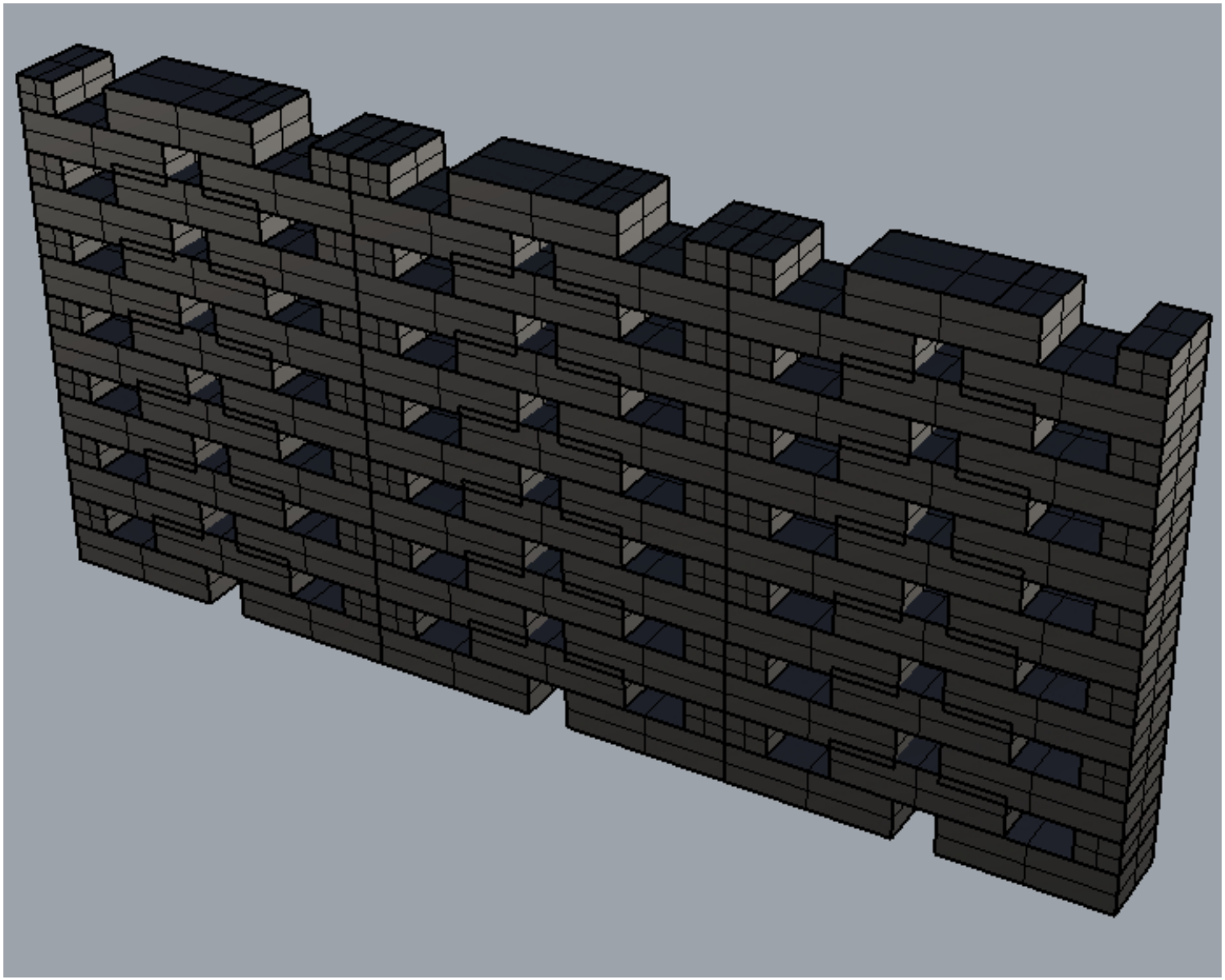
Michelle Yang
Date: 02/20/2014