CONTENT

PRECAST CONCRETE PANEL CURTAIN WALL

- AIR BARRIERS AND SEALANTS
- ATTACHMENT SYSTEMS
- CASE STUDY BUILDINGS
- RAIN PENETRATION AND MOISTURE CONTROL
- SYSTEM JOINTS AND CONNECTIONS
- SYSTEMS COMPARISIONS
- THERMAL INSULATION AND R VALUES

PRECAST CONCRETE PANEL

COMPOSITE WOOD PANEL SYSTEMS

TEAM: RNR

MEMBERS : DEISY RAMIREZ

HITO RODRIGUEZ

JASON SAI HUNG NG

PRECAST CONCRETE PANEL

CONTENT

PRECAST CONCRETE PANEL CURTAIN WALL

- AIR BARRIERS AND SEALANTS
- ATTACHMENT SYSTEMS
- CASE STUDY BUILDINGS
- RAIN PENETRATION AND MOISTURE CONTROL
- SYSTEM JOINTS AND CONNECTIONS
- SYSTEMS COMPARISIONS
- THERMAL INSULATION AND R VALUES

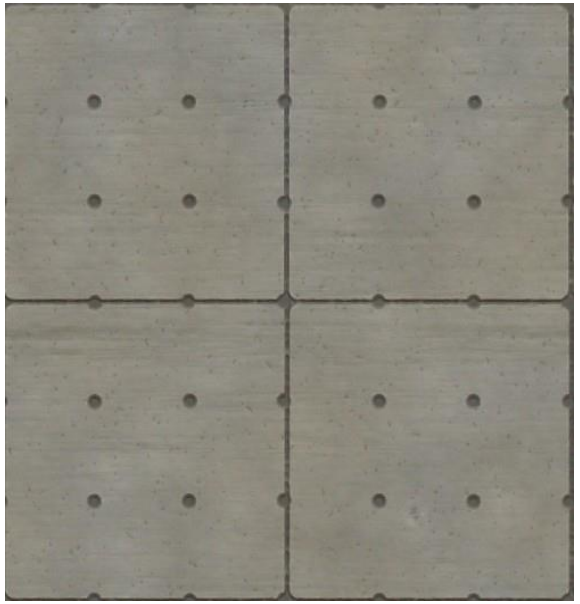

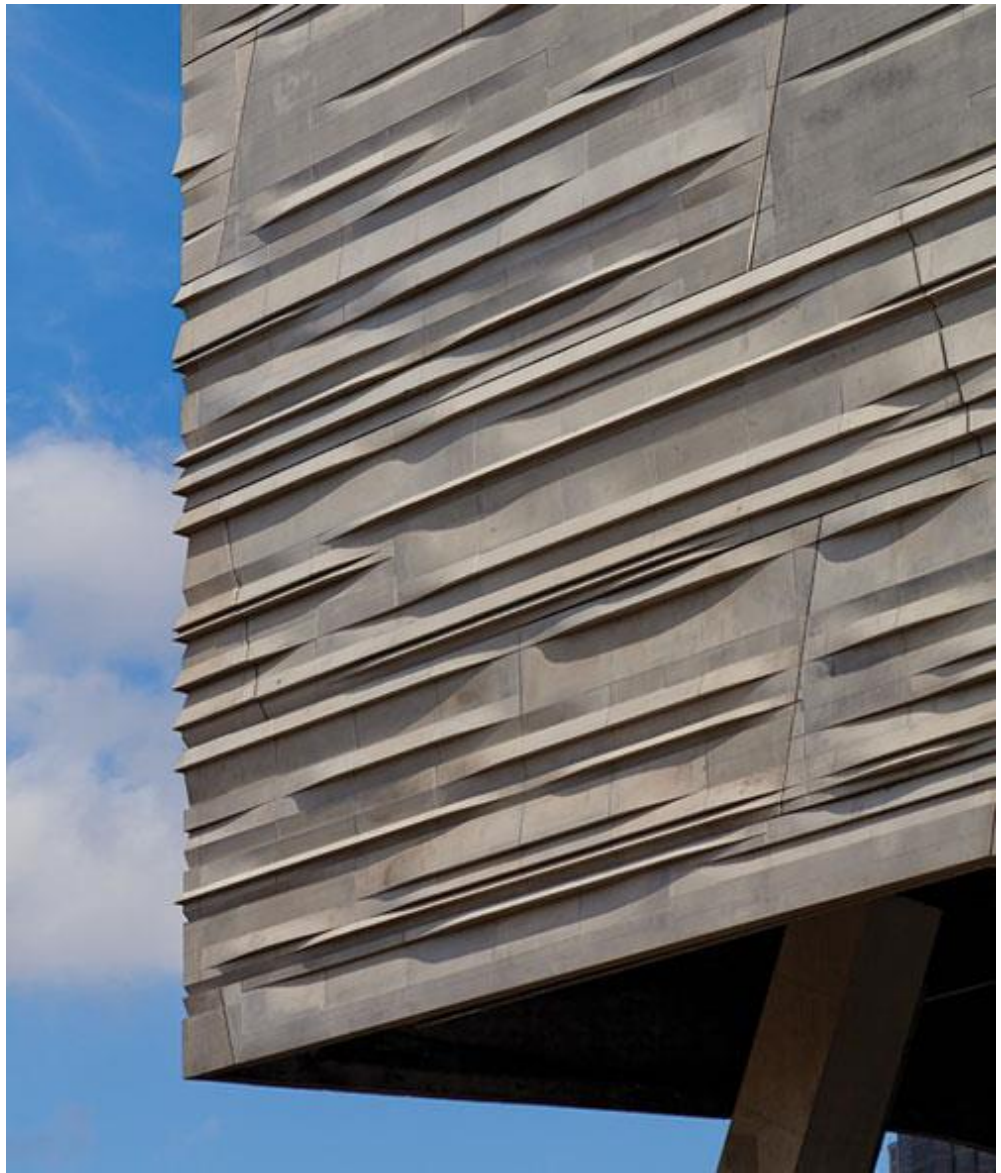

AIR BARRIERS AND SEALANTS

CONTENT

PRECAST CONCRETE PANEL CURTAIN WALL

- AIR BARRIERS AND SEALANTS
- ATTACHMENT SYSTEMS
- CASE STUDY BUILDINGS
- RAIN PENETRATION AND MOISTURE CONTROL
- SYSTEM JOINTS AND CONNECTIONS
- SYSTEMS COMPARISIONS
- THERMAL INSULATION AND R VALUES

- The vapor barrier in this assembly is the precast concrete itself.

Therefore this wall assembly has all of the thermal insulation installed to the interior of the vapor barrier.

- Of particular concern is the fact that the thermal insulation is air permeable (except where spray foam is used).

Therefore this wall assembly should not be used in cold regions or colder.

- In this wall assembly the precast concrete is also the drainage plane and air barrier.

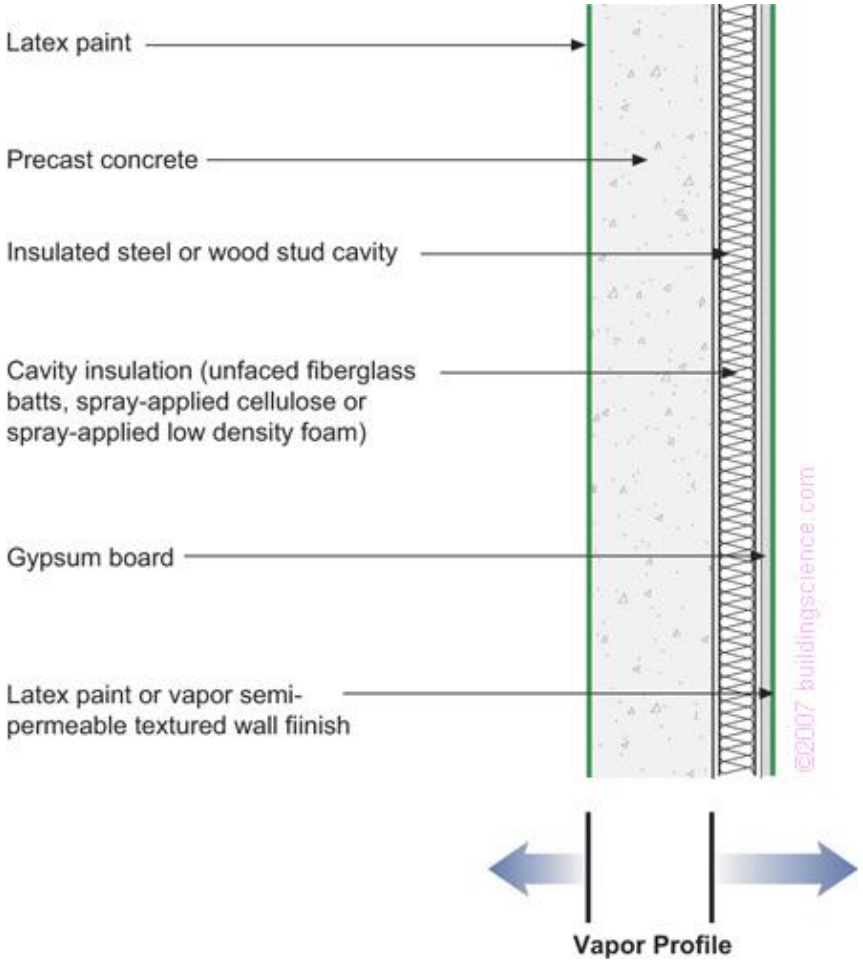

AIR BARRIERS AND SEALANTS

CONTENT

PRECAST CONCRETE PANEL CURTAIN WALL

- AIR BARRIERS AND SEALANTS
- ATTACHMENT SYSTEMS
- CASE STUDY BUILDINGS
- RAIN PENETRATION AND MOISTURE CONTROL
- SYSTEM JOINTS AND CONNECTIONS
- SYSTEMS COMPARISIONS
- THERMAL INSULATION AND R VALUES

Conventional Panels

- Use precast concrete as large format panels on the exterior acting as the exterior finish and structural component that provides the enclosure support function (that is, they collect wind and self-load and transfer it to the primary structure).

- Integrally Insulated Wall Panels (“Sandwich Panels”) Incorporate thermal insulation between an exterior finish Wythe and an interior structural Wythe.

- The exterior and interior wythes are connected with ties that maintain the structural integrity of the panel and provide the degree of composite action desired.

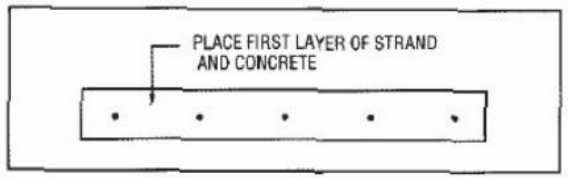

Fig. 4.3.1.a. First step — Place first layer of strand and concrete.

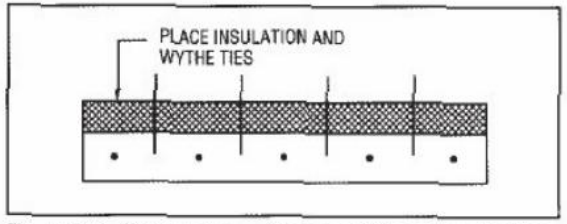

Fig. 4.3.1.b. Second step — Place insulation and wythe ties.

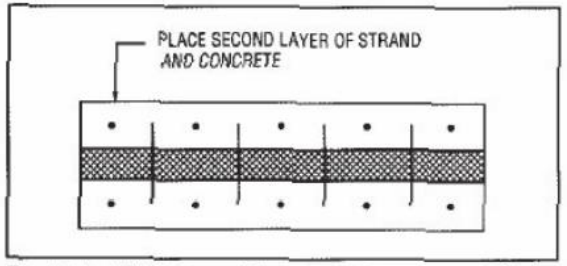

Fig. 4.3.1.c. Third step — Place second layer of strand and concrete.

ATTACHMENT SYSTEMS

CONTENT

PRECAST CONCRETE PANEL CURTAIN WALL

- AIR BARRIERS AND SEALANTS
- ATTACHMENT SYSTEMS
- CASE STUDY BUILDINGS
- RAIN PENETRATION AND MOISTURE CONTROL
- SYSTEM JOINTS AND CONNECTIONS
- SYSTEMS COMPARISIONS
- THERMAL INSULATION AND R VALUES

The attachment of the concrete panel to the structure is made by:

- Steel rod anchors
- Angle support clip
- Bolts
- Slightly flex is needed to permit small amounts of relative movement between the facing and the frame.
- Attachment must transfer all the wind, gravity, and seismic forces on the panel to the building frame.

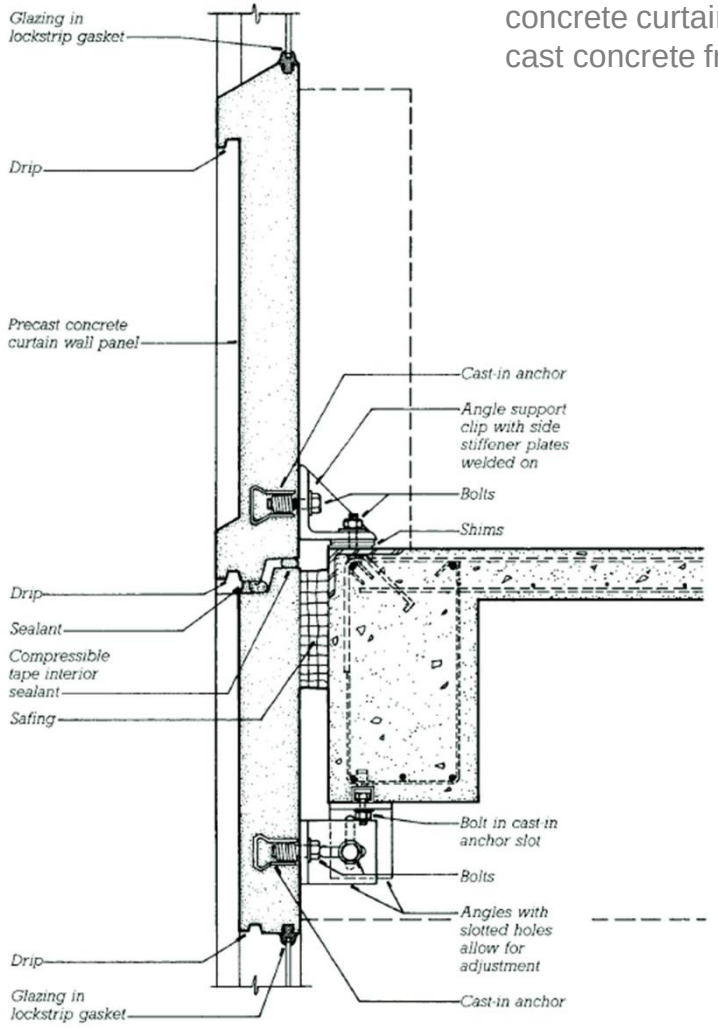

A typical detail of a precast concrete curtain wall on a site cast concrete frame.

ATTACHMENT SYSTEMS

CONTENT

PRECAST CONCRETE PANEL CURTAIN WALL

- AIR BARRIERS AND SEALANTS
- ATTACHMENT SYSTEMS
- CASE STUDY BUILDINGS
- RAIN PENETRATION AND MOISTURE CONTROL
- SYSTEM JOINTS AND CONNECTIONS
- SYSTEMS COMPARISIONS
- THERMAL INSULATION AND R VALUES

The other attachment style for Glass fiber reinforced concrete curtain wall:

- Very thin layer of Glass fiber reinforced concrete is attached by backer rods and sealant.

- Typical connections of Glass fiber reinforced concrete panels to a steel building frame.

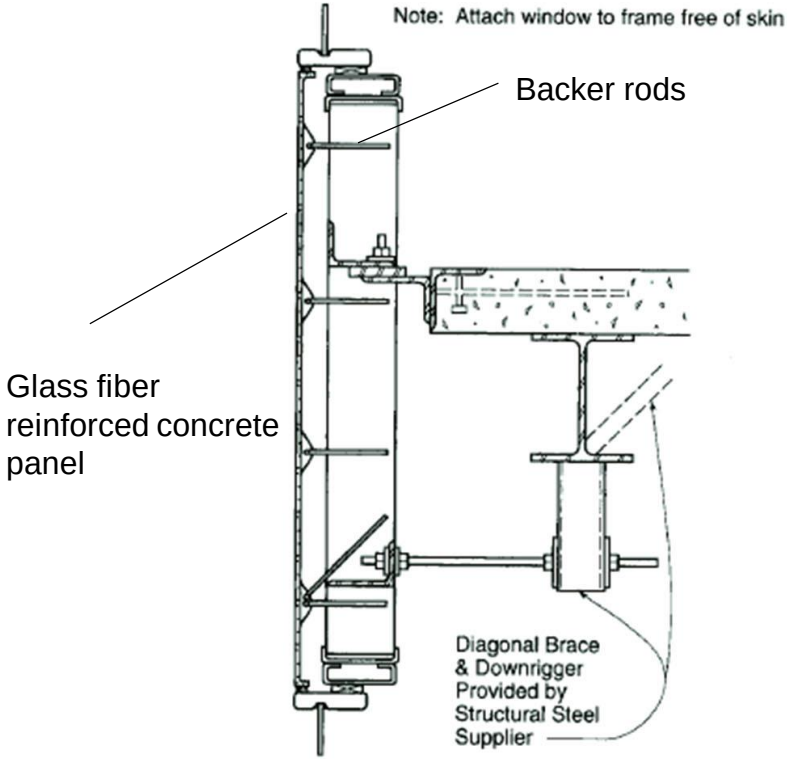

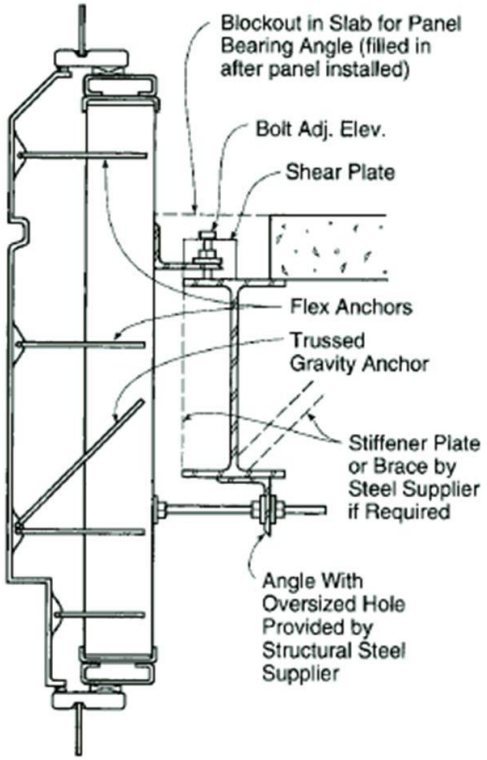

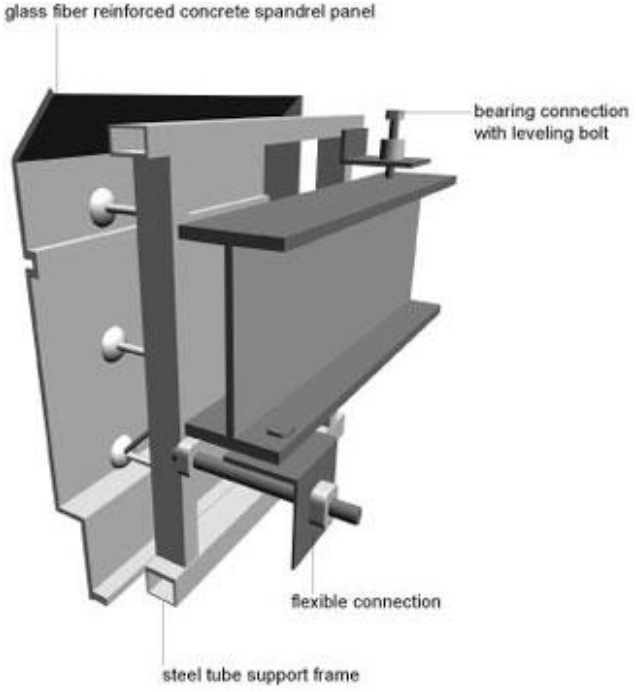

ATTACHMENT SYSTEMS

CONTENT

PRECAST CONCRETE PANEL CURTAIN WALL

- AIR BARRIERS AND SEALANTS
- ATTACHMENT SYSTEMS
- CASE STUDY BUILDINGS
- RAIN PENETRATION AND MOISTURE CONTROL
- SYSTEM JOINTS AND CONNECTIONS
- SYSTEMS COMPARISIONS
- THERMAL INSULATION AND R VALUES

Corner Details

- Concrete panels are mold to L shape.

Or

- mold with an angle edge.

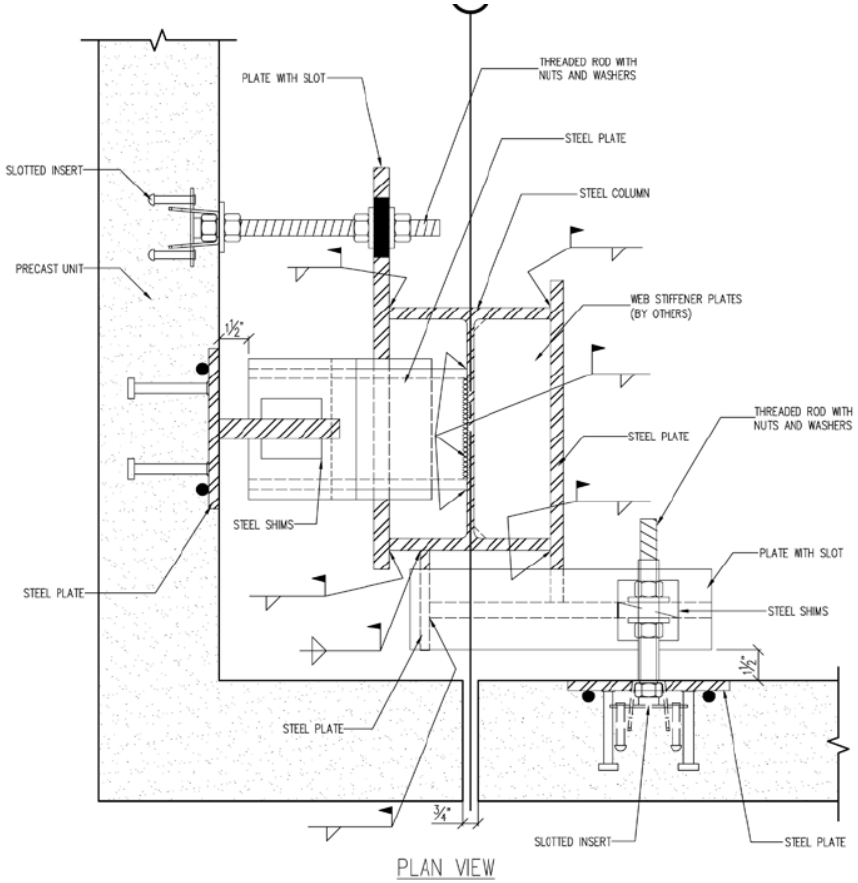

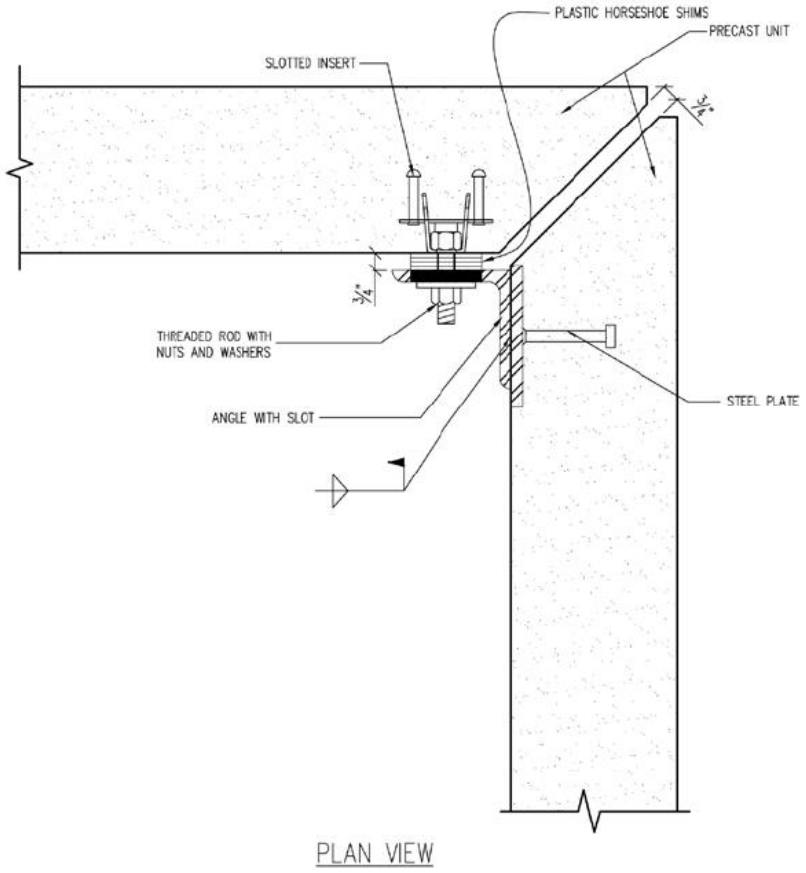

CASE STUDY BUILDINGS

CONTENT

PRECAST CONCRETE PANEL CURTAIN WALL

- AIR BARRIERS AND SEALANTS
- ATTACHMENT SYSTEMS
- CASE STUDY BUILDINGS
- RAIN PENETRATION AND MOISTURE CONTROL
- SYSTEM JOINTS AND CONNECTIONS
- SYSTEMS COMPARISIONS
- THERMAL INSULATION AND R VALUES

Rubi Offices / Bailo Rull ADD+ Arquitectura

Architects: ADD+ Arquitectura – Manuel Bailo Esteve, Rosa Rull Bertran
Location: Barcelona, Spain
Project year: 2008

The construction consists to use a precast concrete panels for all the building. For the structural part the project we have used conventional precast solutions. But for the façade we have designed special flat piece and special no flat piece witch control the views to the landscape. The different disposition of those specials pieces generates a special space between inside an outside.

CASE STUDY BUILDINGS

CONTENT

PRECAST CONCRETE PANEL CURTAIN WALL

- AIR BARRIERS AND SEALANTS
- ATTACHMENT SYSTEMS
- CASE STUDY BUILDINGS
- RAIN PENETRATION AND MOISTURE CONTROL
- SYSTEM JOINTS AND CONNECTIONS
- SYSTEMS COMPARISIONS
- THERMAL INSULATION AND R VALUES

Nakagin Capsule Tower

Architect: **Kisho Kurokawa**

Location: **Tokyo, Japan**

Project Year: **1972**

CASE STUDY BUILDINGS

CONTENT

PRECAST CONCRETE PANEL CURTAIN WALL

- AIR BARRIERS AND SEALANTS
- ATTACHMENT SYSTEMS
- CASE STUDY BUILDINGS
- RAIN PENETRATION AND MOISTURE CONTROL
- SYSTEM JOINTS AND CONNECTIONS
- SYSTEMS COMPARISIONS
- THERMAL INSULATION AND R VALUES

Nakagin Capsule Tower

- It is a prototype for architecture of sustainability and recycleability, as each module can be plugged in to the central core and replaced or exchanged when necessary.

- The tower had a design period of only four months- shorter than usual, and it was rushed. The designing went on even after construction had already started.

- Each unit to be installed to the concrete core with only 4 high-tension bolts, which keeps the units replaceable.

- All pieces of the pods were manufactured in factory then transported to the site by truck.

- The capsules were inserted in the shipping containers by use of a crane, and then fastened to the concrete core shaft.

RAIN PENETRATION AND MOISTURE CONTROL

CONTENT

PRECAST CONCRETE PANEL CURTAIN WALL

- AIR BARRIERS AND SEALANTS
- ATTACHMENT SYSTEMS
- CASE STUDY BUILDINGS
- RAIN PENETRATION AND MOISTURE CONTROL
- SYSTEM JOINTS AND CONNECTIONS
- SYSTEMS COMPARISIONS
- THERMAL INSULATION AND R VALUES

-It has a small moisture storage (hygric buffer) capacity due to the precast concrete construction.

-The wall assembly does contain water sensitive cavity insulation (except where spray foam is used) and it is important that this assembly can dry inwards – therefore vapor semi impermeable interior finishes such as vinyl wall coverings should be avoided.

-The backup wall for the precast concrete panels is an insulated, metal stud back-up wall assembly that is covered with a waterproofing membrane, such as rolled on tar. The joints must prevent leakage from rain and also be able to withstand thermal expansion and structural movement. The Pre-cast panels will have no structural loads other than its own weight and the loads of wind and seismic activity.

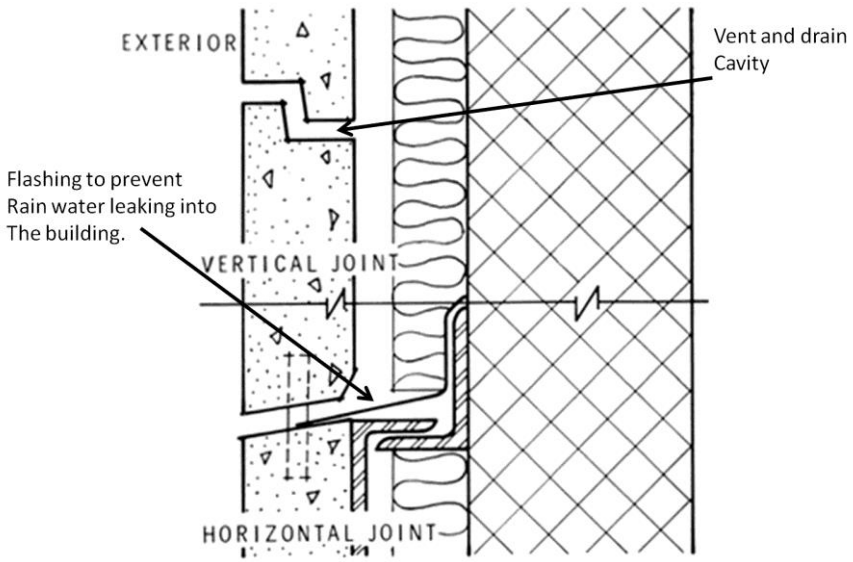

SYSTEM JOINTS AND CONNECTIONS

CONTENT

PRECAST CONCRETE PANEL CURTAIN WALL

- AIR BARRIERS AND SEALANTS
- ATTACHMENT SYSTEMS
- CASE STUDY BUILDINGS
- RAIN PENETRATION AND MOISTURE CONTROL
- SYSTEM JOINTS AND CONNECTIONS
- SYSTEMS COMPARISIONS
- THERMAL INSULATION AND R VALUES

- Wall system employing lightweight precast concrete wall panels.

- The precast wall panels include a concrete slab and a plurality of spaced-apart elongated generally parallel bent sheet metal channels that are partially embedded in the slab.

- Each wall panel can be coupled to a support wall by extending self-tapping screws through metallic wall framing members and the channels at locations where the framing members and channels cross.

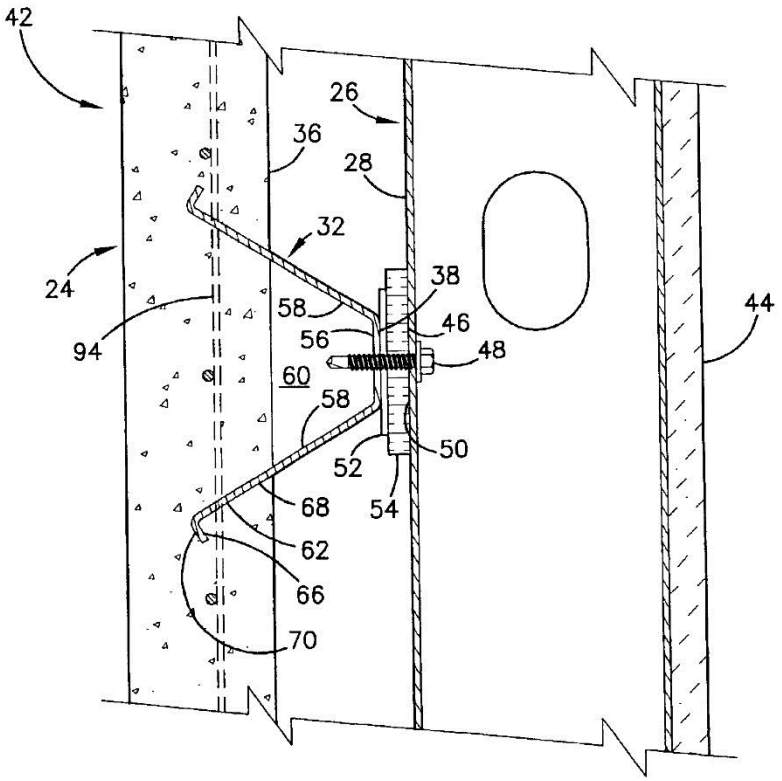

SYSTEM JOINTS AND CONNECTIONS

CONTENT

PRECAST CONCRETE PANEL CURTAIN WALL

- AIR BARRIERS AND SEALANTS
- ATTACHMENT SYSTEMS
- CASE STUDY BUILDINGS
- RAIN PENETRATION AND MOISTURE CONTROL
- SYSTEM JOINTS AND CONNECTIONS
- SYSTEMS COMPARISIONS
- THERMAL INSULATION AND R VALUES

[6] Sealant joints are intended to be adhered to the concrete, and the sealant is itself hydrophobic (repelling water from entering small cracks). The vertical joints have as much propensity to leak as the horizontal. However, more water flows over the horizontal joints. As water tends to flow vertically, and is only slightly challenging to vertical joints by wind. Hence, horizontal joints are more likely to let water leak past than vertical joints. Finally, buildings tend to shrink, settle, and sag, all of this movement is accommodated at horizontal joints, which have a tendency to bulge outward. This creates a small lip that further encourages water to leak inward at horizontals.

higher performance requirements (more exposure to driving rain, more sensitive interior uses, higher owner expectations) a slope to the outside is recommended. An outward slope of about 5% provides a significant benefit by ensuring that any water that might leak into the horizontal joint (which is the joint most challenged[6]) is directed against the exterior "rainscreen" sealant bead, not against the interior water and air barrier seal. Some precasters feel this small slope increases the risk of chipped edges at the hidden interior edge and prefer dead flat horizontal joints or interior chamfers.

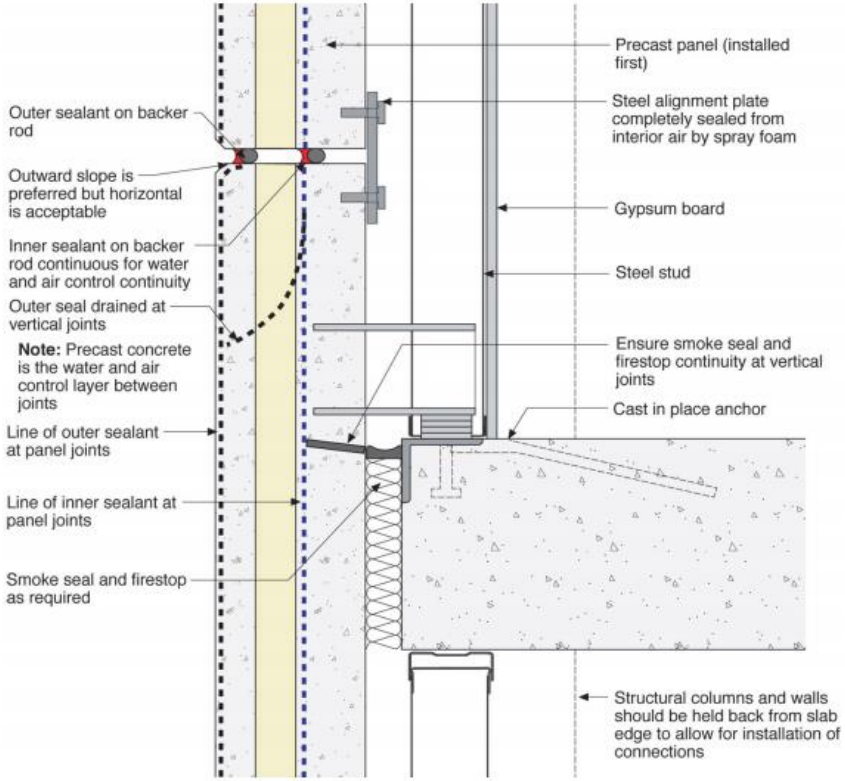

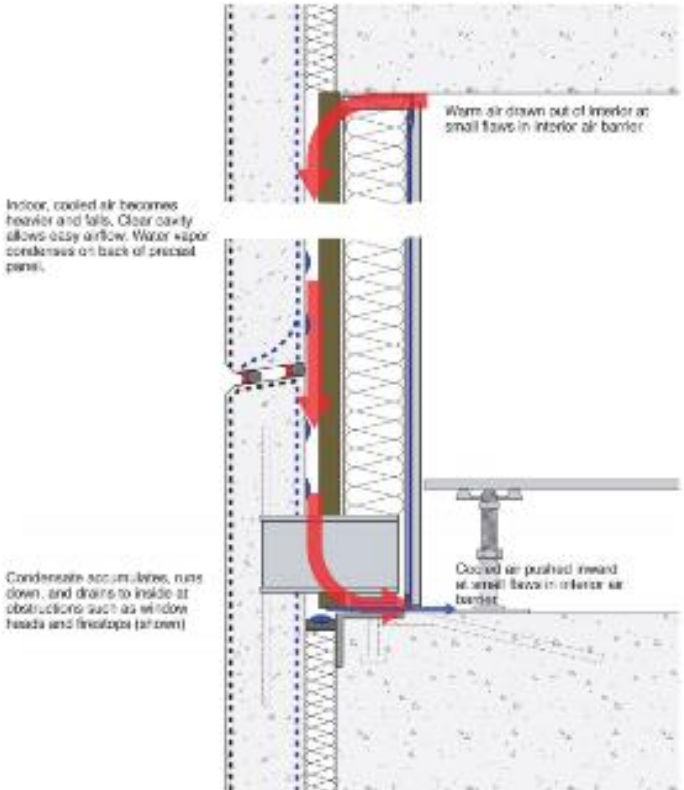

SYSTEM COMPARISIONS

CONTENT

PRECAST CONCRETE PANEL CURTAIN WALL

• AIR BARRIERS AND SEALANTS

• ATTACHMENT SYSTEMS

• CASE STUDY BUILDINGS

• RAIN PENETRATION AND MOISTURE CONTROL

• SYSTEM JOINTS AND CONNECTIONS

• SYSTEMS COMPARISIONS

• THERMAL INSULATION AND R VALUES

The different types of precast concrete cladding panels:

- Precast concrete curtain wall

  Up to 24’ high
  3-1/2 to 10” thick
  8’ to 12’ in width

- Precast concrete sandwich panels

  Up to 24’ High
  5-1/2” to 12” in thickness

  Thermal insulation is incorporated as an inner layer of the panel.

  Wire ties bind inner and outer layer of concrete with the insulation together.

- Ultra high performance concrete

  Thinner and lighter than those traditional precast concrete panel.

- Glass fiber reinforced concrete curtain wall

  A relatively new cladding material that has several advantages over conventional precast concrete panels.
  ½ inch in thickness

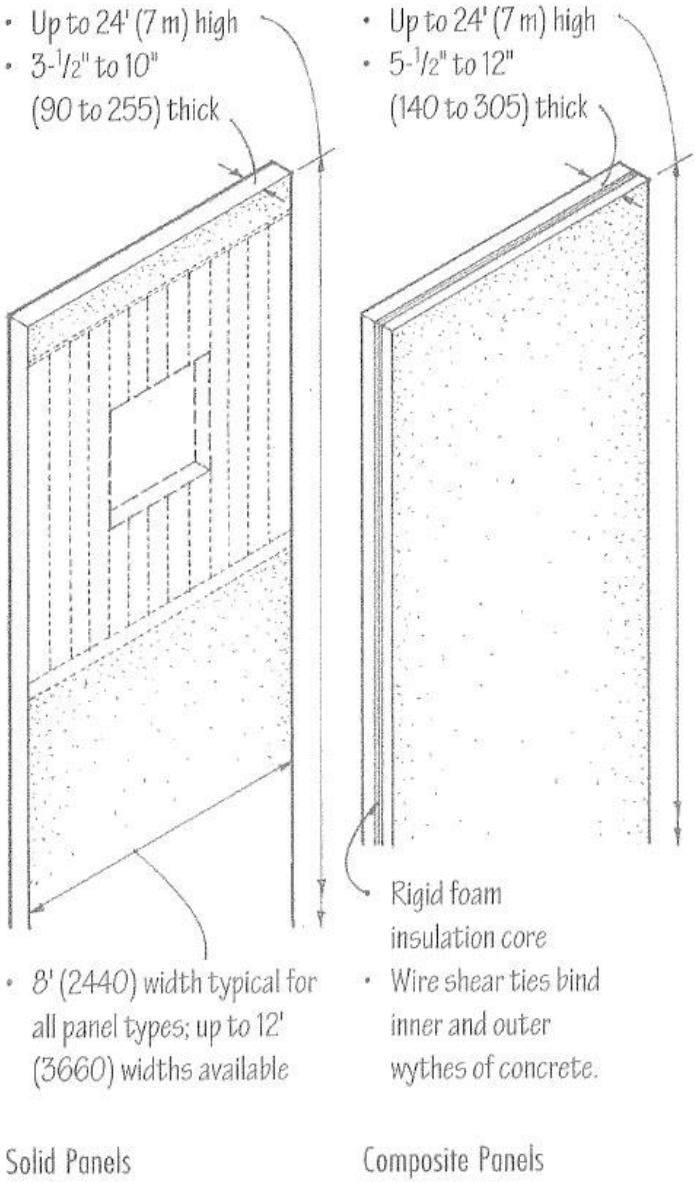

SYSTEM COMPARISIONS

CONTENT

PRECAST CONCRETE PANEL CURTAIN WALL

- AIR BARRIERS AND SEALANTS
- ATTACHMENT SYSTEMS
- CASE STUDY BUILDINGS
- RAIN PENETRATION AND MOISTURE CONTROL
- SYSTEM JOINTS AND CONNECTIONS
- SYSTEMS COMPARISIONS
- THERMAL INSULATION AND R VALUES

Glass fiber reinforced concrete curtain wall

Advantages:

- Admixture of short glass fibers give tensile strength so that no steel reinforcing is required.
- Panel thickness and weight are about one quarter of those for conventional precast concrete panels.
- Save money on shipping
- Panels are easier to handle.
- Allow the use of lighter attachment hardware.
- The light weight of the cladding also allow loadbearing frame of the building to be lighter and less expensive.

Special Requirement:

- Must be manufactured from a special alkali-resistant type of glass to prevent their disintegration in the concrete.
- A weld frame of steel studs with L-shaped steel rod anchors is needed to hold the glass fiber reinforced concrete panels.

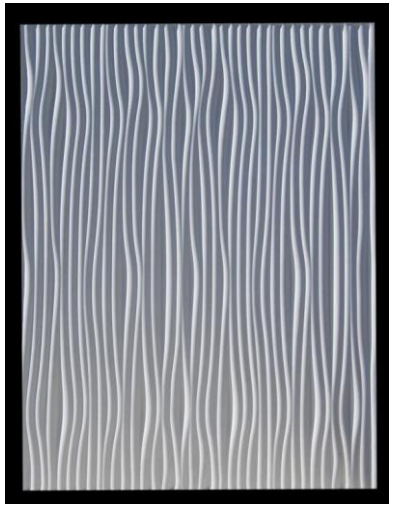

SYSTEM COMPARISIONS

CONTENT

PRECAST CONCRETE PANEL CURTAIN WALL

- AIR BARRIERS AND SEALANTS
- ATTACHMENT SYSTEMS
- CASE STUDY BUILDINGS
- RAIN PENETRATION AND MOISTURE CONTROL
- SYSTEM JOINTS AND CONNECTIONS
- SYSTEMS COMPARISIONS
- THERMAL INSULATION AND R VALUES

Construction for Glass fiber reinforced concrete panels

- Concrete and chopped glass fibers are sprayed into a mold and compacted with a hand roller to created a panel facing.

- A special gun deposits a layer of sand-cement slurry simultaneously with resistant glass fiber reinforcing.

- Three layers are usually required, each layer is compacted with a small hand roller before the next layer is applied.

- The overall thickness is usually ½ inch.

- A welded frame of steel studs with L-shaped steel rod anchors is lowered onto the back of the facing and held just above it by spacers.

- After overnight curing, the completed panel is removed from the mold.

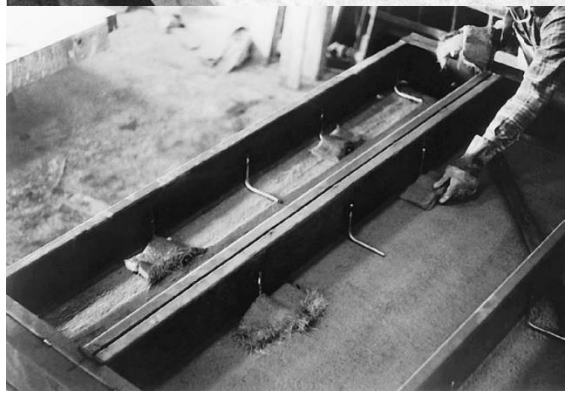

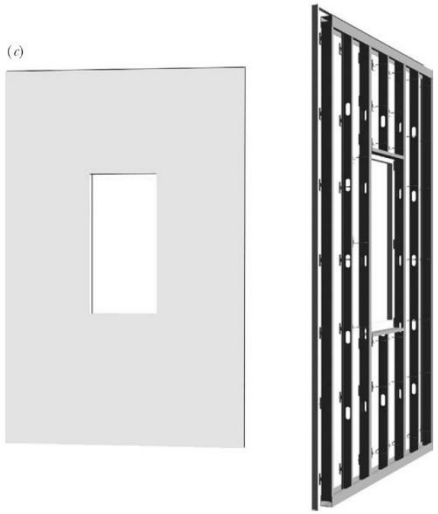

THERMAL INSULATION AND R VALUES

CONTENT

PRECAST CONCRETE PANEL CURTAIN WALL

- AIR BARRIERS AND SEALANTS
- ATTACHMENT SYSTEMS
- CASE STUDY BUILDINGS
- RAIN PENETRATION AND MOISTURE CONTROL
- SYSTEM JOINTS AND CONNECTIONS
- SYSTEMS COMPARISIONS
- THERMAL INSULATION AND R VALUES

There three ways to insulate precast concrete panel:

1. Precast concrete sandwich panels: thermal insulation is incorporated as an inner layer of the panel.

.2. Insulation maybe affixed to the back of the panel.

.3. Insulation provide in a nonstructural backup wall that is constructed in place.

-The R-value achieved by precast concrete insulated wall panels can vary widely depending on the desired performance of the wall panel.

-Increased R-values are achieved by increasing the insulation thickness between the two concrete panels.

-R-values for insulated wall panels range from R-5 to R-50. The vast majority of the insulating properties come directly from the insulation; however, concrete does possess some insulating properties as well.

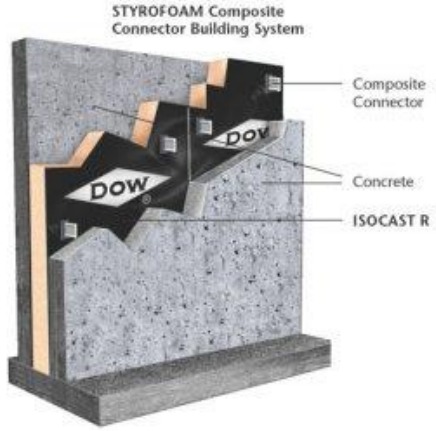

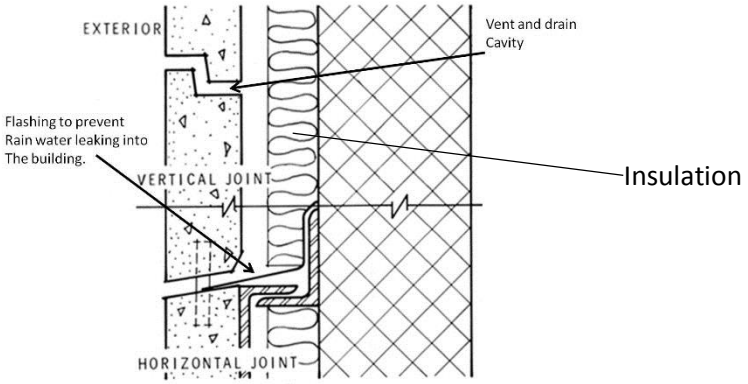

THERMAL INSULATION AND R VALUES

CONTENT

PRECAST CONCRETE PANEL CURTAIN WALL

- AIR BARRIERS AND SEALANTS
- ATTACHMENT SYSTEMS
- CASE STUDY BUILDINGS
- RAIN PENETRATION AND MOISTURE CONTROL
- SYSTEM JOINTS AND CONNECTIONS
- SYSTEMS COMPARISIONS
- THERMAL INSULATION AND R VALUES

The common types of insulation in precast concrete insulated wall panels are:

1. Expanded polystyrene (EPS), R-value: 3.85/in. to 4.35/ in.
2. Extruded polystyrene (XPS), R-value: 5.0/in.
3. Polyisocyanurate, R-value: 6.0/in. to 8.0/in.

Expanded polystyrene

Polyisocyanurate

The R value for precast concrete panel are:

4 inches R-value: 0.71

8 inches R-value: 1.11

12 inches R-value: 1.28

Extruded polystyrene

Based on the R-values above, the polyisocyanurate insulation provides a greater R-value per inch. However, it is important to note that a cost analysis of the three types of insulation may determine that one of the other two insulation types may be more desirable depending on insulation costs in a given area.

COMPOSITE WOOD PANELING SYSTEM

CONTENT

COMPOSITE WOOD PANELING SYSTEM

- AIR BARRIERS AND SEALANTS
- ATTACHMENT SYSTEMS
- CASE STUDY BUILDINGS
- THERMAL INSULATION AND R VALUES

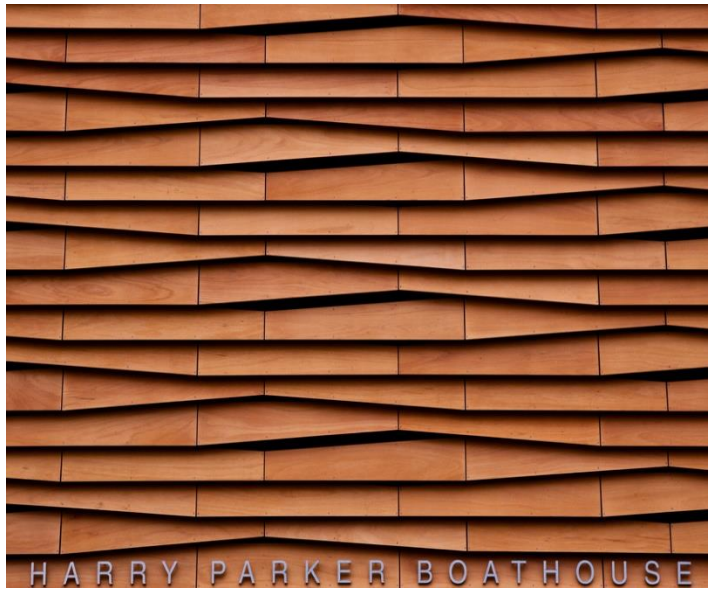

AIR BARRIERS AND SEALANTS

CONTENT

COMPOSITE WOOD PANELING SYSTEM

- AIR BARRIERS AND SEALANTS
- ATTACHMENT SYSTEMS
- CASE STUDY BUILDINGS
- THERMAL INSULATION AND R VALUES

VENTILATED FACADE

- It evenly spreads the water vapour from the building's interior to the exterior.
- Prevents moisture from getting trapped and dampening the insulation.
- Air move between the wood panel and insulation reduced temperature changes.
- It improved sound insulation.

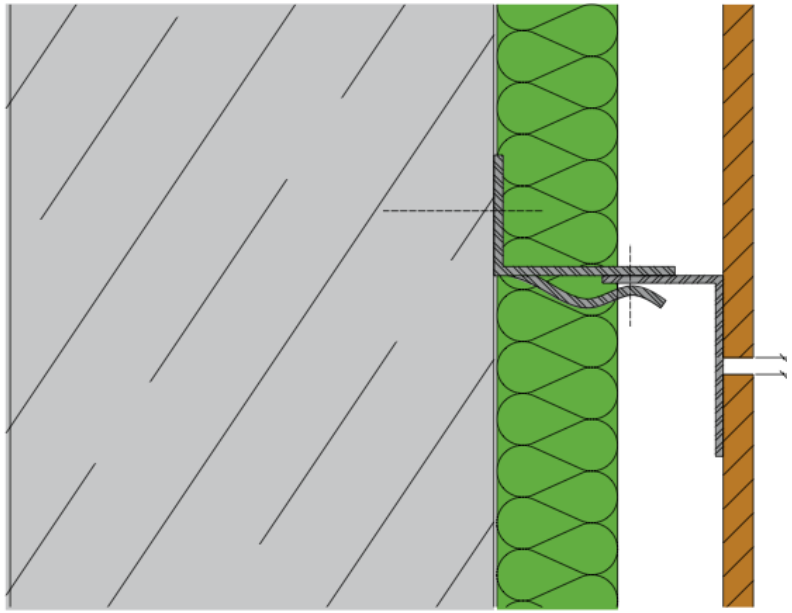

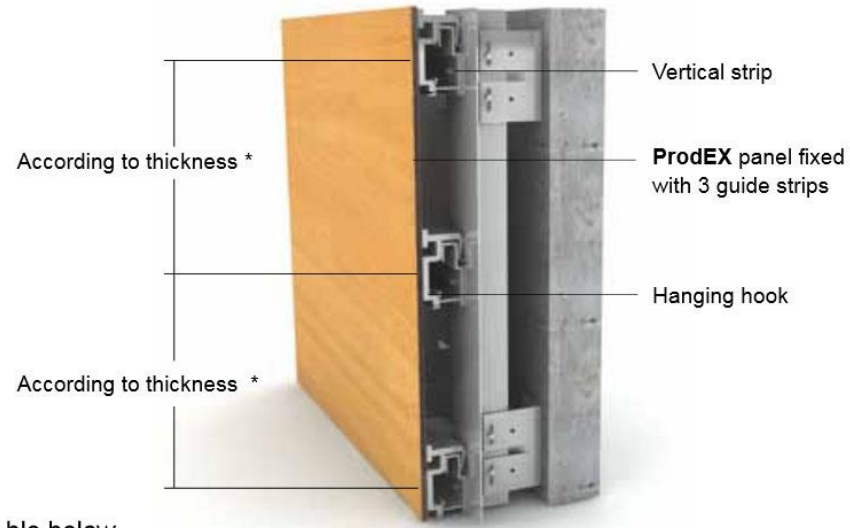

CONTENT

COMPOSITE WOOD PANELING SYSTEM

- AIR BARRIERS AND SEALANTS
- ATTACHMENT SYSTEMS
- CASE STUDY BUILDINGS
- THERMAL INSULATION AND R VALUES

ATTACHMENT SYSTEMS

The supporting frame is attach to the structure by using:

1) The angle brackets are attached to the concrete structure by screws.

2) The aluminum strip is fixed to the angle bracket using screws.

The composite wood panel is attach to the supporting frame by using:

1) Aluminum hanging hoods are installed to the wood panel and they secured to the aluminum guide strip on the supporting frame.

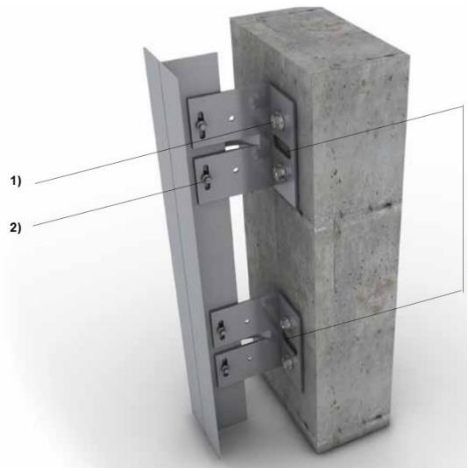

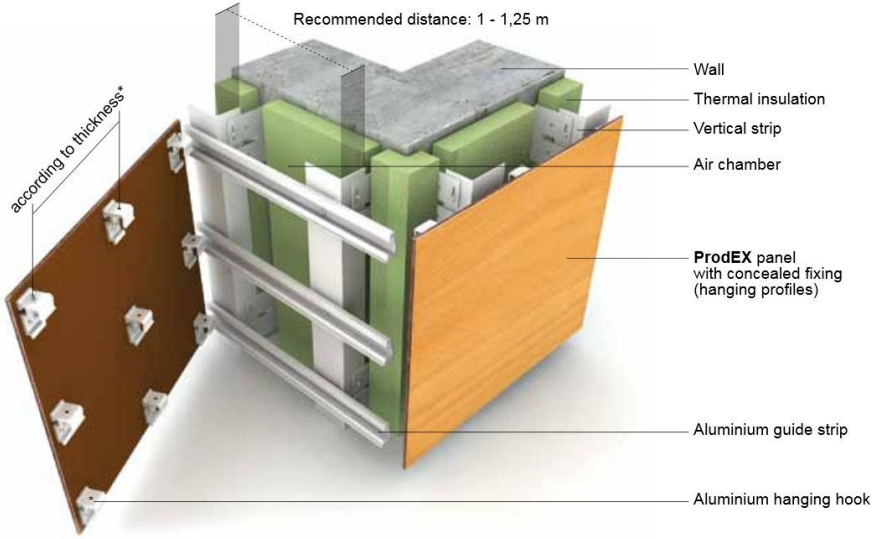

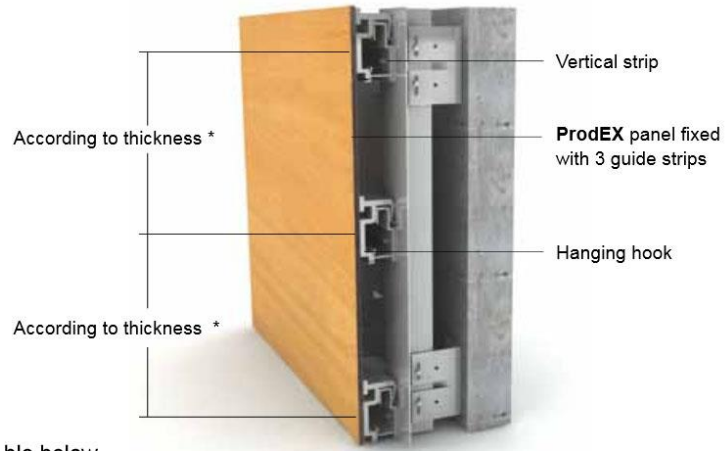

ATTACHMENT SYSTEMS

CONTENT

COMPOSITE WOOD PANELING SYSTEM

- AIR BARRIERS AND SEALANTS
- ATTACHMENT SYSTEMS
- CASE STUDY BUILDINGS
- THERMAL INSULATION AND R VALUES

Corner Details

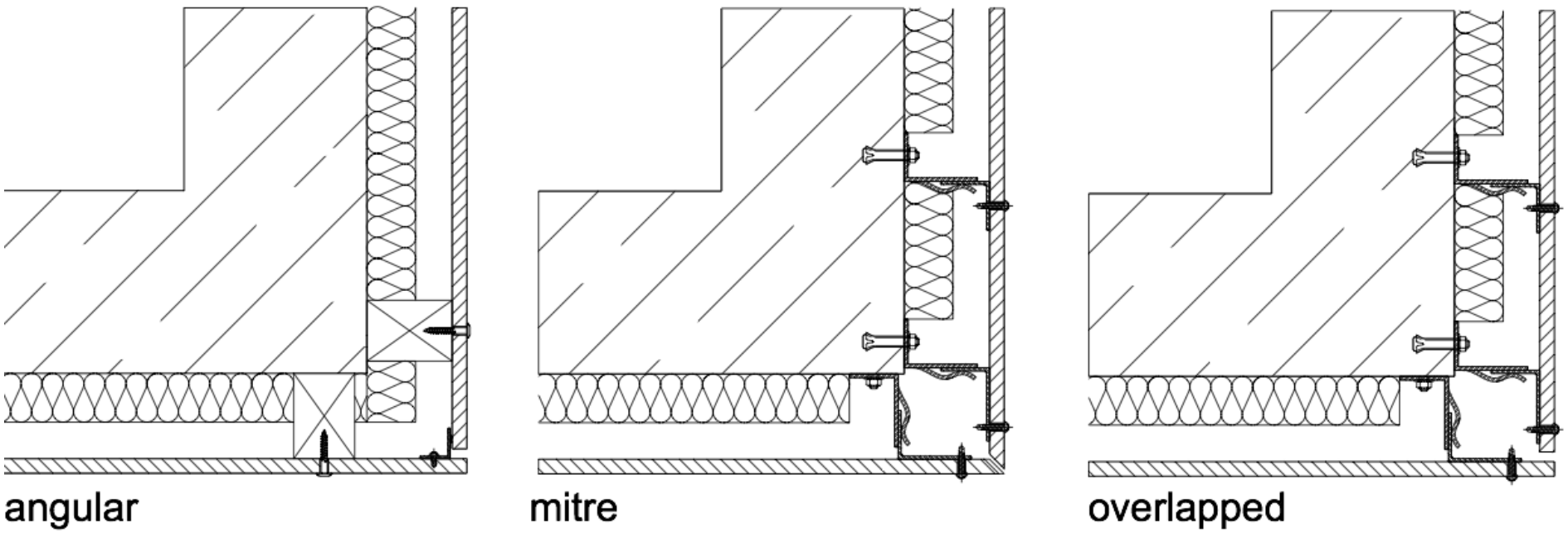

ATTACHMENT SYSTEMS

CONTENT

COMPOSITE WOOD PANELING SYSTEM

- AIR BARRIERS AND SEALANTS
- ATTACHMENT SYSTEMS
- CASE STUDY BUILDINGS
- THERMAL INSULATION AND R VALUES

Corner Details

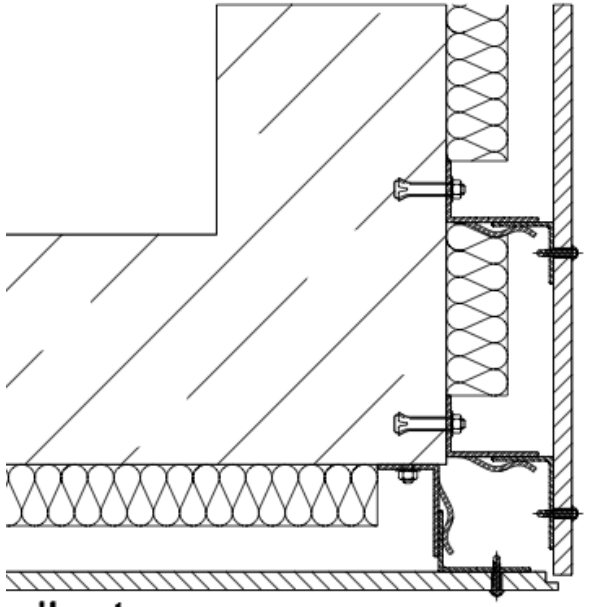

pilaster

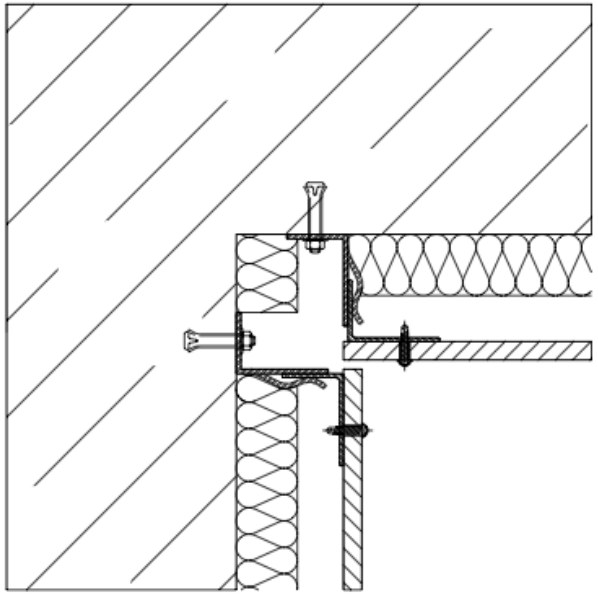

interior

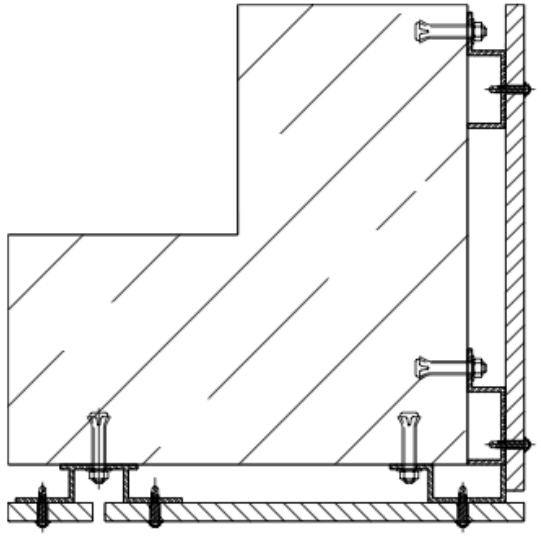

overlapped
(strips of USA)

CASE STUDY BUILDING

CONTENT

COMPOSITE WOOD PANELING SYSTEM

- AIR BARRIERS AND SEALANTS
- ATTACHMENT SYSTEMS
- CASE STUDY BUILDINGS
- THERMAL INSULATION AND R VALUES

Eco-Sustainable House / Djuric Tardio Architectes

Architects: Djuric Tardio Architectes
Location: Paris, France
Completion: 2012

Completely built in wood panels placed on a pedestal (the ground was very bad), the house is completely prefabricated in a workshop and delivered to the site to be finally assembled in just two weeks.
The pre-cut panels, supplemented by wood fiber insulation and non-treated siding, they arrived at the site almost finished, reducing pollution to a minimum (the site being located in a dense suburb). The façades is in wood panels too, were mounted along the floor, and with a very efficient exterior insulation system.

CASE STUDY BUILDING

CONTENT

COMPOSITE WOOD PANELING SYSTEM

- AIR BARRIERS AND SEALANTS
- ATTACHMENT SYSTEMS
- CASE STUDY BUILDINGS
- THERMAL INSULATION AND R VALUES

Community Rowing Boathouse

Architects: Anmahian Winton Architects
Location: Boston, MA, USA
Project Year: 2008

- The architects strove to design a boathouse that would conserve energy and natural resources and have low operating costs.
- Active building-envelope system, created using digital design tools and in close collaboration with fabricators and other consultants.
- The structures were made of aluminum frames and composite panels, the prefabricated system has vents that open with a tug on an off-the-shelf chain pull.
- These vents not only create an active facade; they eliminate the need for mechanical heating and cooling of the 300-foot-long boat storage bays.

CASE STUDY BUILDING

CONTENT

COMPOSITE WOOD PANELING SYSTEM

- AIR BARRIERS AND SEALANTS
- ATTACHMENT SYSTEMS
- CASE STUDY BUILDINGS
- THERMAL INSULATION AND R VALUES

Community Rowing Boathouse

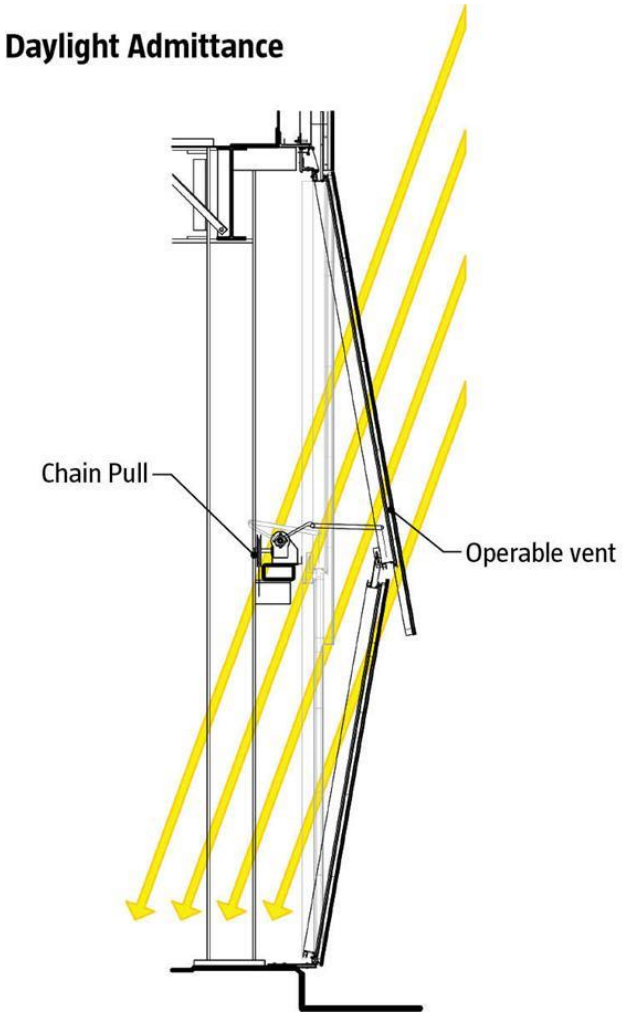

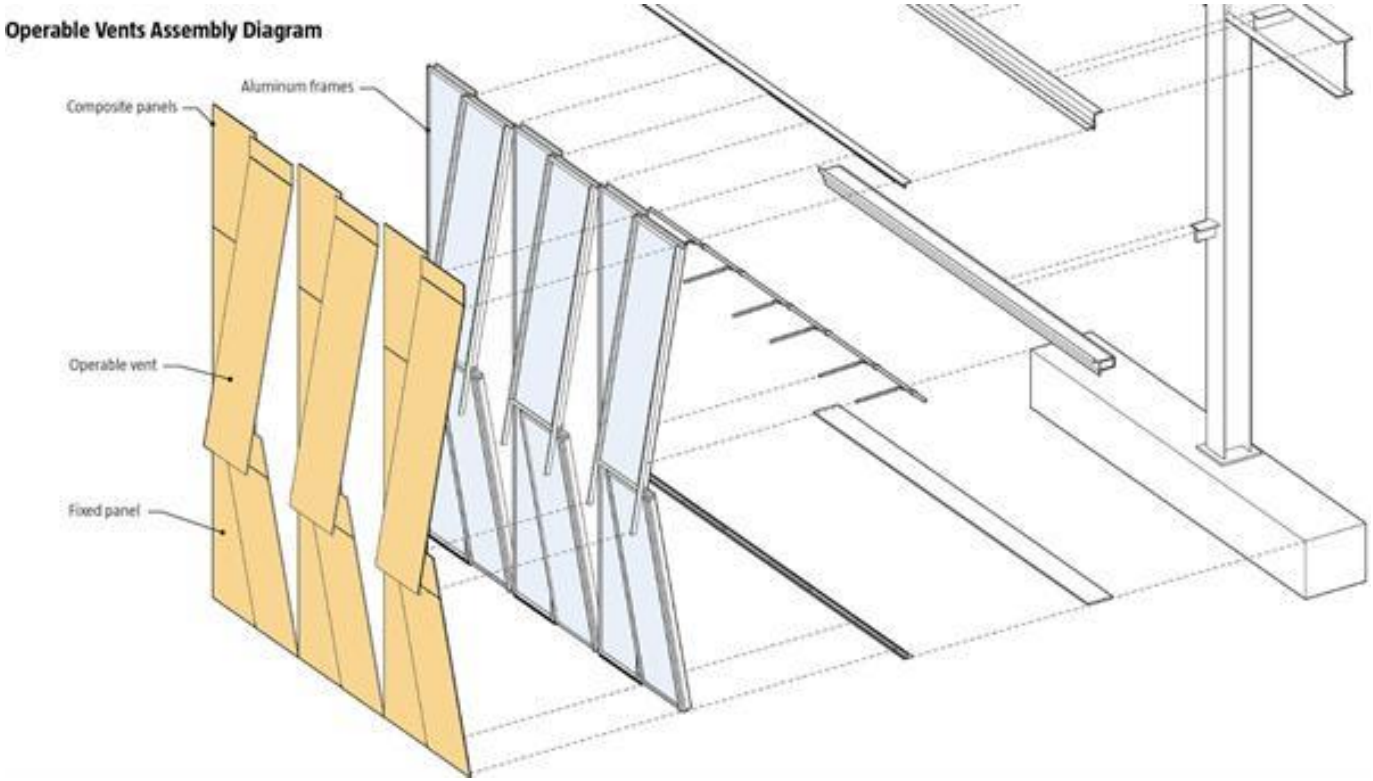

CASE STUDY BUILDING

CONTENT

COMPOSITE WOOD PANELING SYSTEM

- AIR BARRIERS AND SEALANTS
- ATTACHMENT SYSTEMS
- CASE STUDY BUILDINGS
- THERMAL INSULATION AND R VALUES

Community Rowing Boathouse

Connection Details

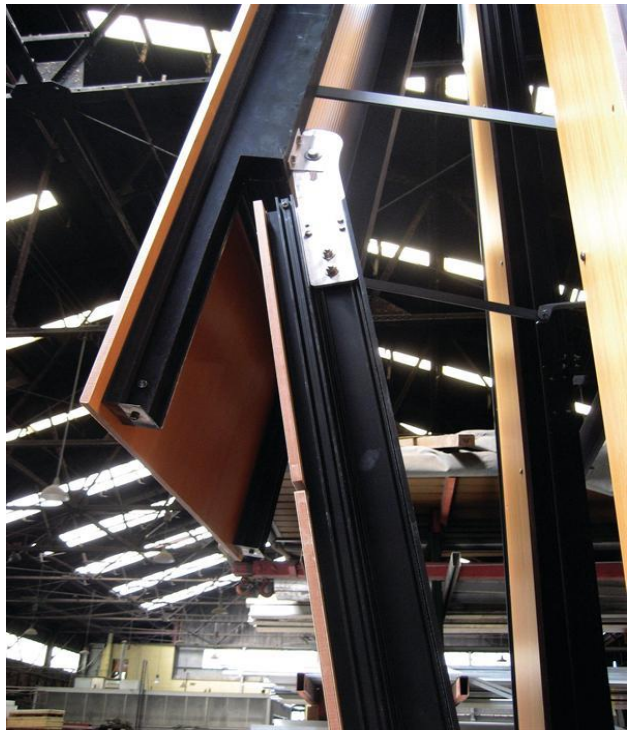

THERMAL INSULATION AND R VALUES

CONTENT

COMPOSITE WOOD PANELING SYSTEM

- AIR BARRIERS AND SEALANTS
- ATTACHMENT SYSTEMS
- CASE STUDY BUILDINGS
- THERMAL INSULATION AND R VALUES

Way to insulate composite wood panel wall:

- Insulation provide in a nonstructural backup wall.
- Multi layer composite insulating panel which the insulation provides between two wood layers.

The common types of insulation in precast concrete insulated wall panels are:

1. Expanded polystyrene (EPS), R-value: 3.85/in. to 4.35/ in. (varies with material's density)
2. Extruded polystyrene (XPS), R-value: 5.0/in.
3. Polyisocyanurate, R-value: 6.0/in. to 8.0/in.

The R value for plywood panel are:

7/8 inches R-value: 1.09

1 inches R-value: 1.25
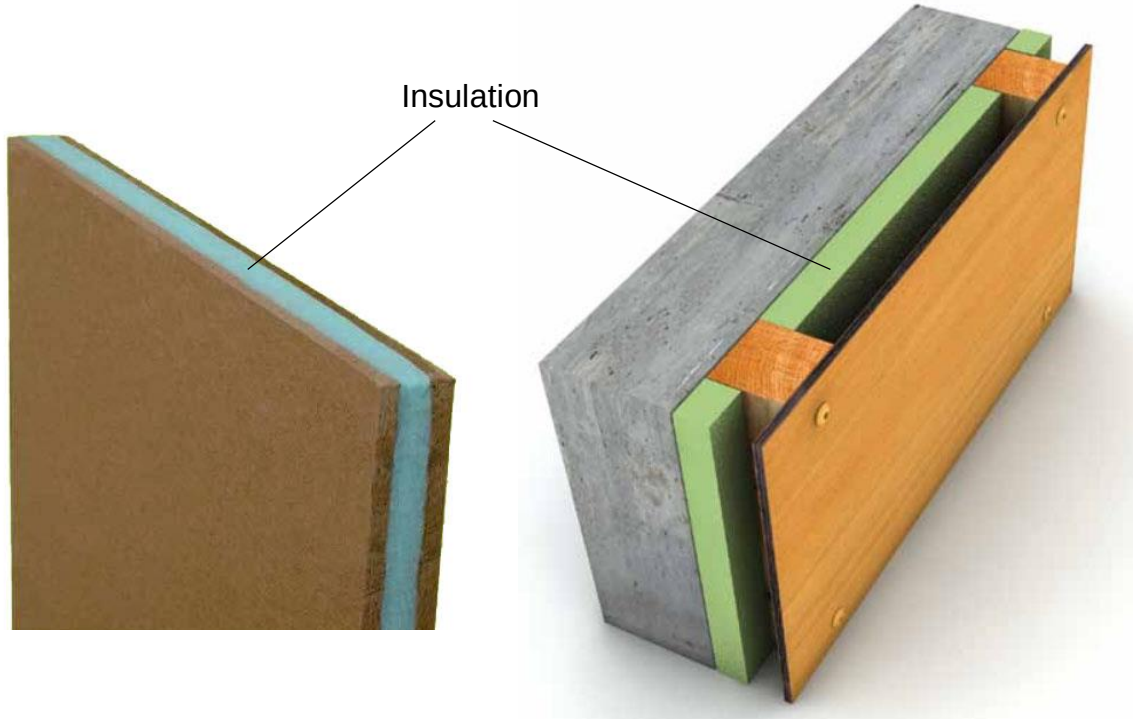
1-1/8 inches R-value: 1.41