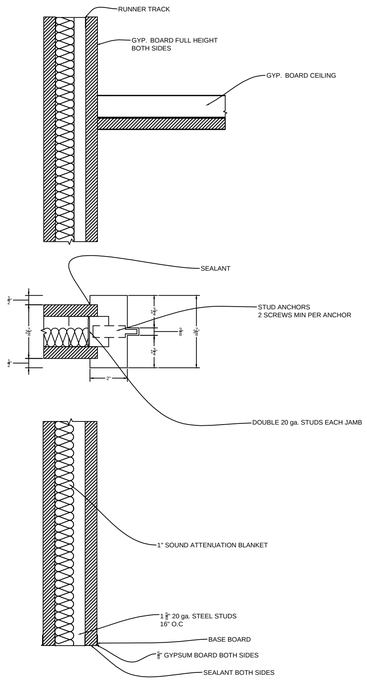

STEEL STUD GYP WALL , 12' HEIGHT

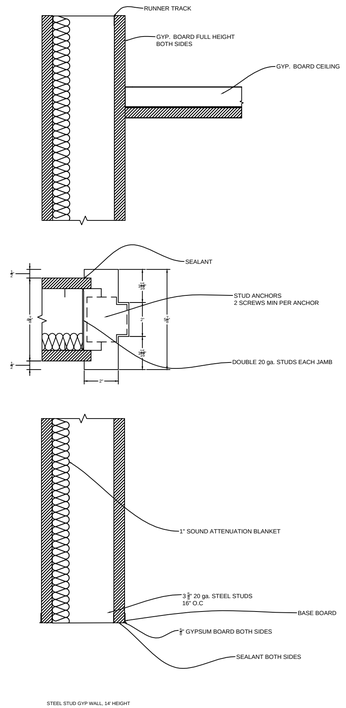

STEEL STUD GYP WALL, 14' HEIGHT

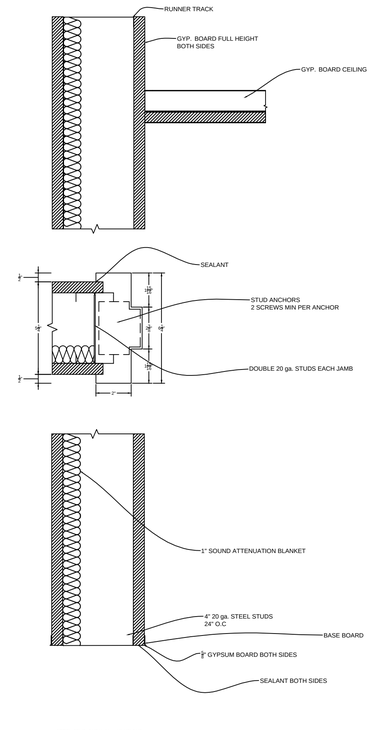

STEEL STUD GYP WALL, 16' HEIGHT

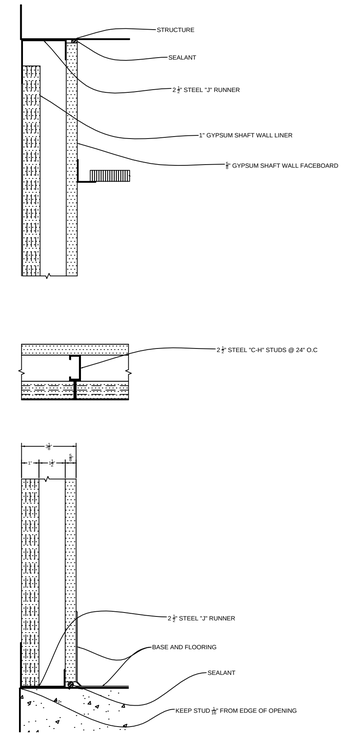

SHAFT WALL (1 HR FIRE RATING)

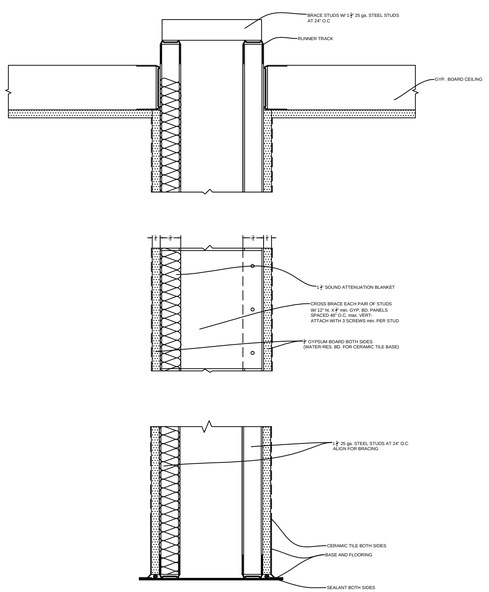

CHASE WALL (1 HR FIRE RATING)

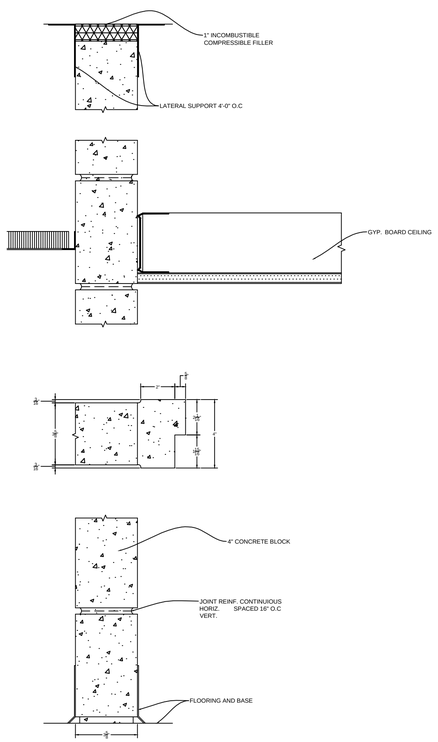

4" NOMINAL CONCRETE BLOCK WALL (RATED)

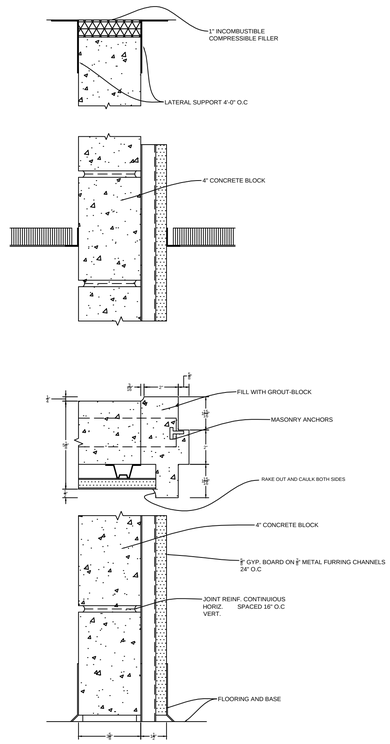

4" NOMINAL CONCRETE BLOCK WALL WITH FURRING (RATED)

L:\acoreview\MEAArchitecture\Teaching\CIAP2012 Springs\interiores wrapped and Mechirly text logo.jpg

A-400

Rev. #	Description	Date

Project number	8
Date	09/18\14
Drawn by	ROBERT DAVIS
Professor Name	KING