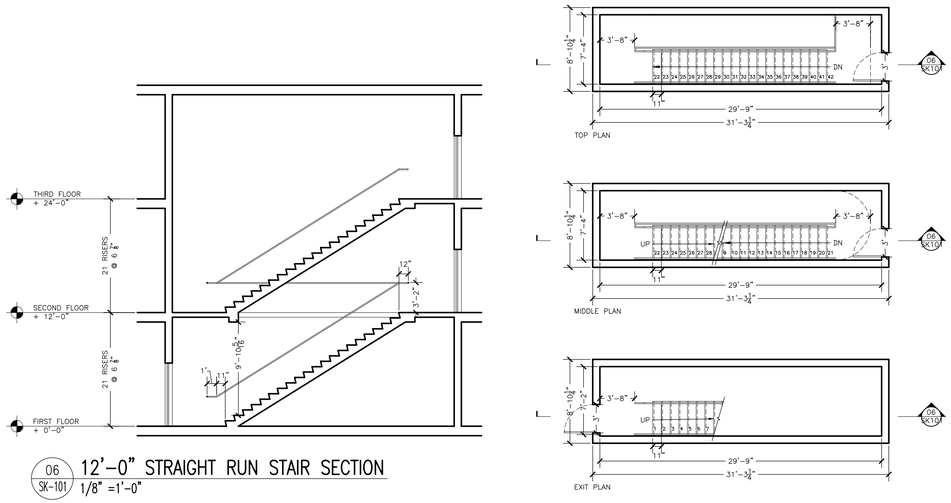

06 SK-101 12'-0" STRAIGHT RUN STAIR SECTION
1/8" =1'-0"

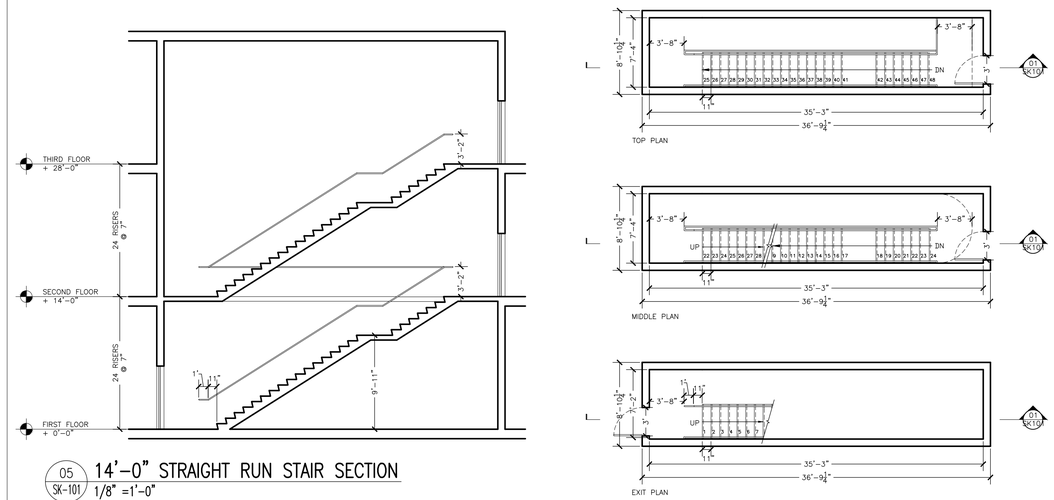

05 SK-101 14'-0" STRAIGHT RUN STAIR SECTION
1/8" =1'-0"

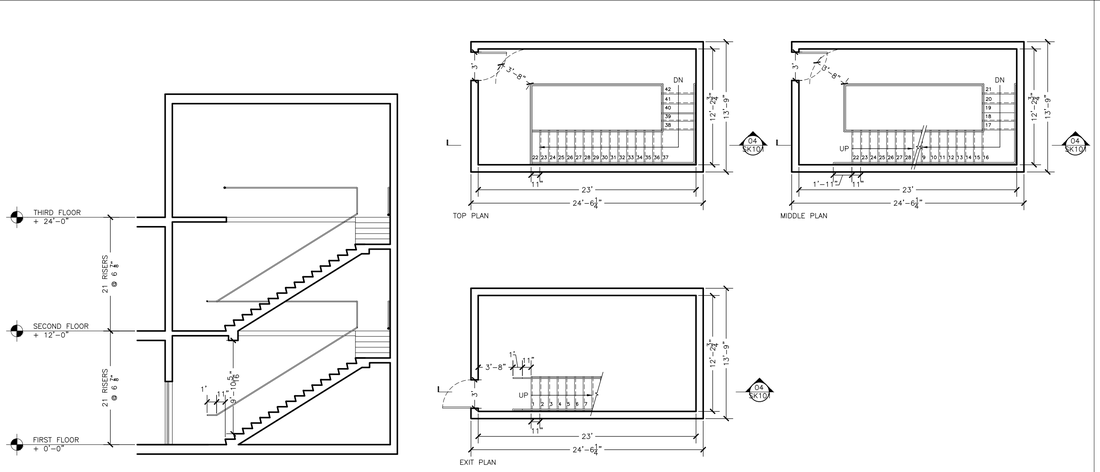

04 SK-101 12'-0" "L"-SHAPE STAIR SECTION
1/8" =1'-0"

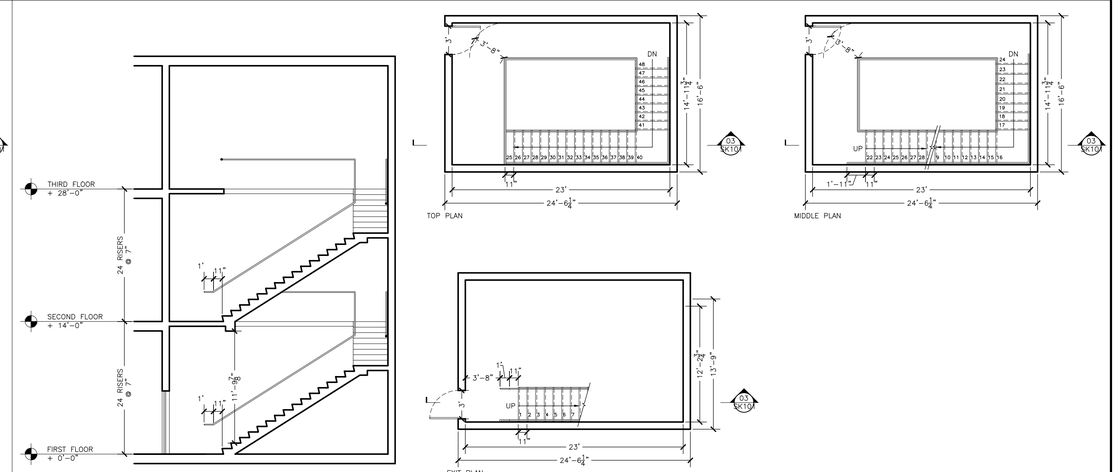

03 SK-101 14'-0" "L"-SHAPE STAIR SECTION
1/8" =1'-0"

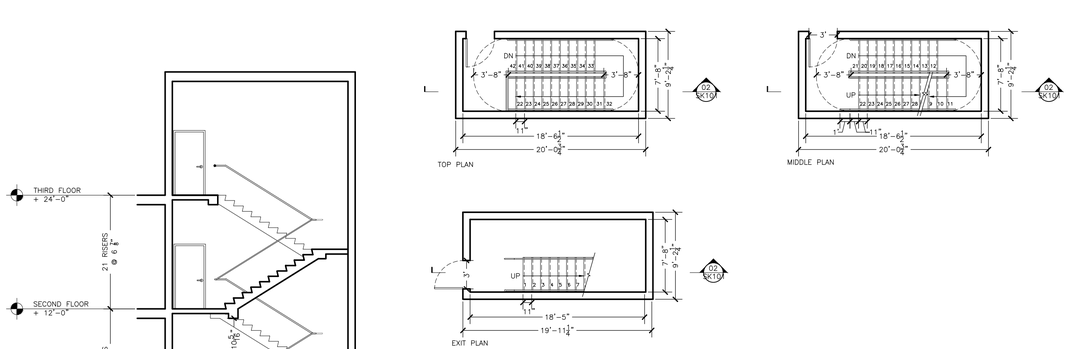

02 SK-101 12'-0" "U"-SHAPE STAIR SECTION
1/8" =1'-0"

STAIR HEIGHT	12'0"
MAX. RISER HEIGHT	7"
NUMBER OF RISERS 144"/7"= 20.57	21
RISER HEIGHT 144"/21= 6 7/8"	6 7/8"
TREAD WIDTH 24"> 2X(6 7/8")+ T <25 1/2" 10 1/2">T<11 1/2"	11"

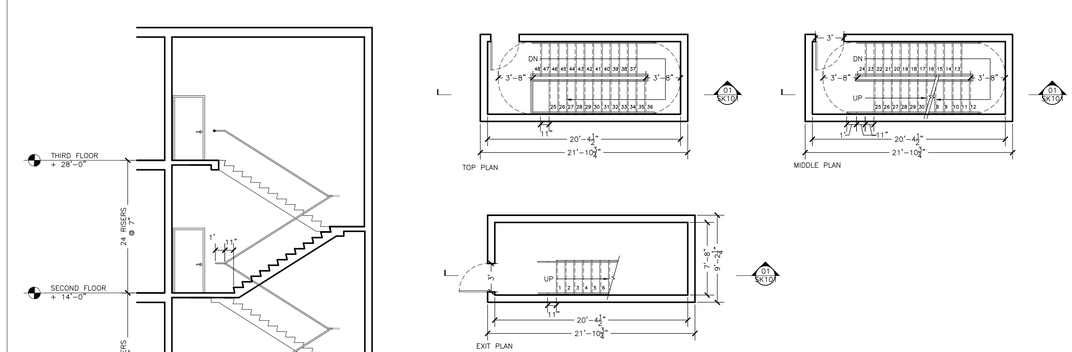

01 SK-101 14'-0" "U"-SHAPE STAIR SECTION
1/8" =1'-0"

STAIR HEIGHT	14'0"
MAX. RISER HEIGHT	7"
NUMBER OF RISERS 168"/7"= 24	24
RISER HEIGHT 168"/24= 7"	7"
TREAD WIDTH 24"> 2X(7")+ T <25 1/2" 10">T<11 1/2"	11"

NYCCT

Project Address:
285 JAY STREET
BROOKLYN NY, 10021

Architect:
Name
Address
Email

Rev. #	Description	Date
01	SUBMISSION 1	9/29/14

STAIR STUDIES

Project number	01.2014
Date	09.29.14
Drawn by	MARIE BARETSKY
Professor Name	KING

SK-101

Scale 1/8" = 1'-0"

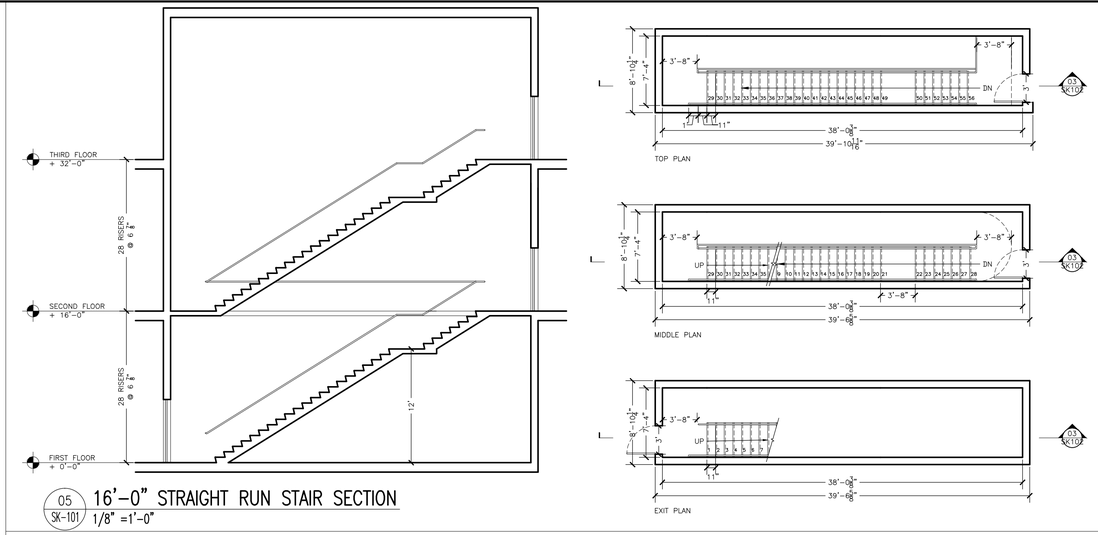

05 / SK-101 16'-0" STRAIGHT RUN STAIR SECTION
1/8" =1'-0"

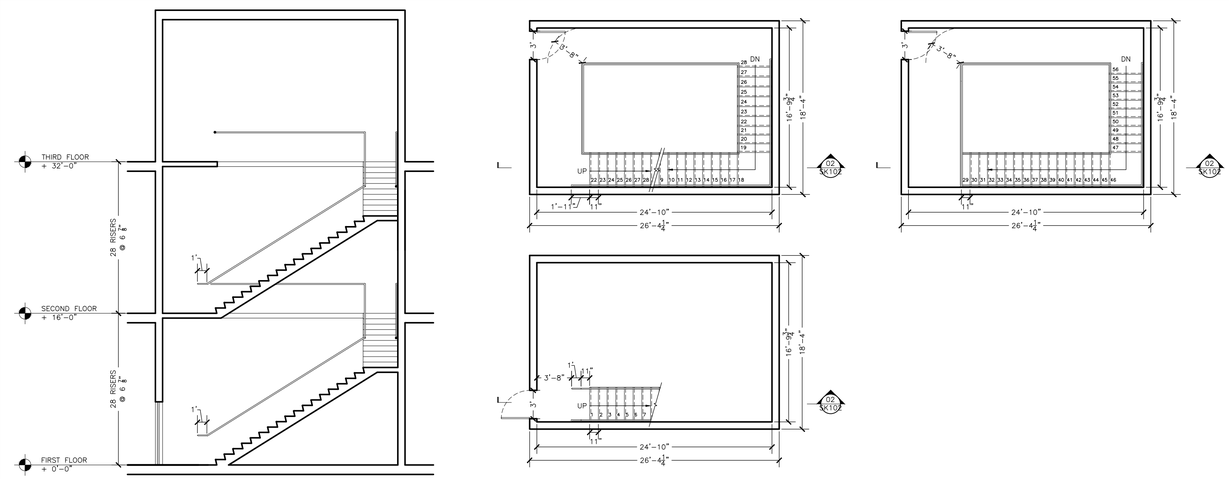

02 / SK-102 16'-0" "L"-SHAPE STAIR SECTION
1/8" =1'-0"

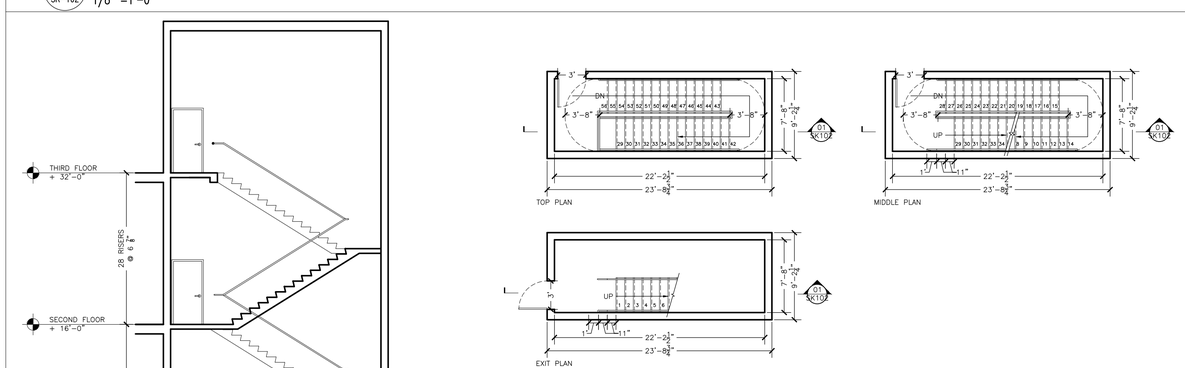

01 / SK-102 16'-0" "U"-SHAPE STAIR SECTION
1/8" =1'-0"

STAIR HEIGHT	16'0"
MAX. RISER HEIGHT	7"
NUMBER OF RISERS 192"/7"= 27.4	28
RISER HEIGHT 192"/28= 6 7/8"	6 7/8"
TREAD WIDTH 24"> 2X(6 7/8")+ T <25 3/4" 10"<T<11 1/2"	11"

NYCCT

Project Address:
285 JAY STREET
BROOKLYN NY, 10021

Architect:
Name
Address
Email

Rev. #	Description	Date
01	SUBMISSION 1	9/29/14

STAIR STUDIES

Project number	01.2014
Date	09.29.14
Drawn by	MARIE BARETSKY
Professor Name	KING

SK-102

Scale 1/8" = 1'-0"