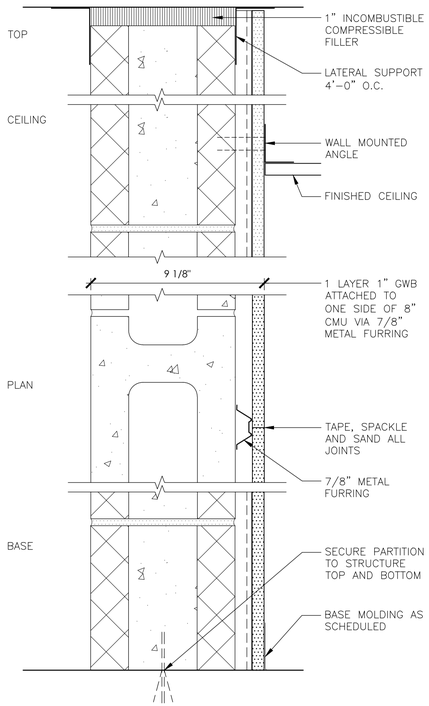

10 / A-400 8" MASONRY PARTITION W/GWB
3" =1'-0"

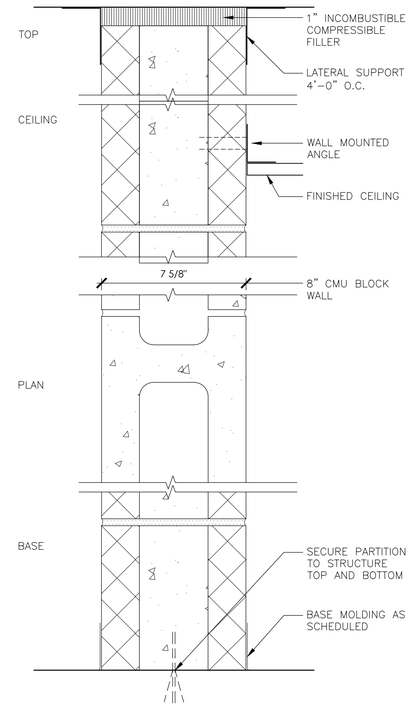

09 / A-400 8" MASONRY PARTITION
3" =1'-0"

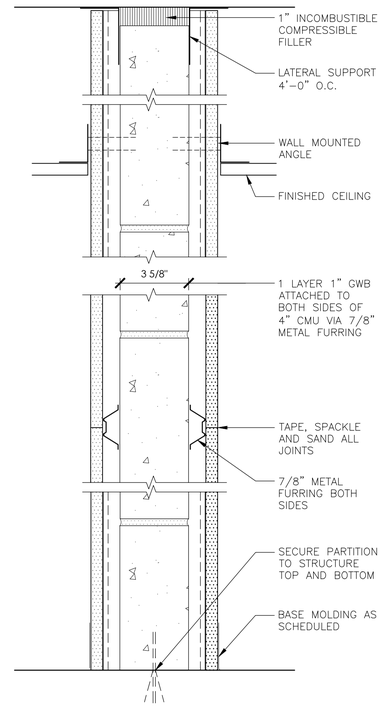

08 / A-400 4" MASONRY PARTITION W/GWB
3" =1'-0"

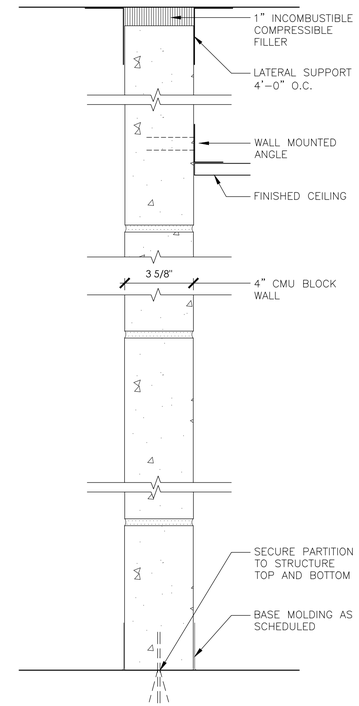

07 / A-400 4" MASONRY PARTITION
3" =1'-0"

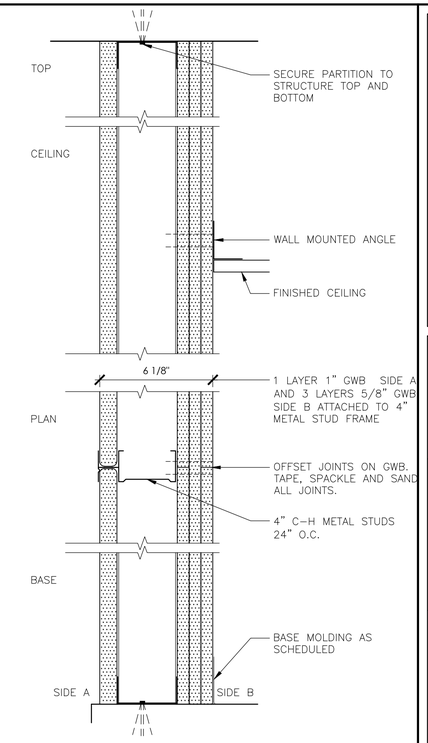

06 / A-400 SHAFTWALL 3HR RATED
3" =1'-0"

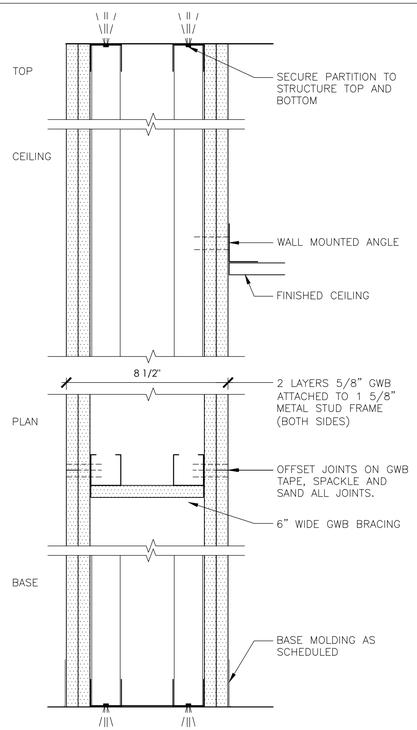

05 / A-400 CHASE WALL- 2HR RATED
3" =1'-0"

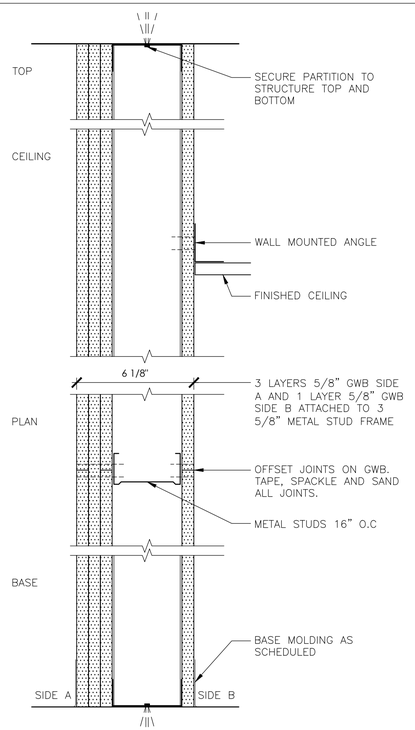

04 / A-400 2-HR RATED PARTITION
3" =1'-0"

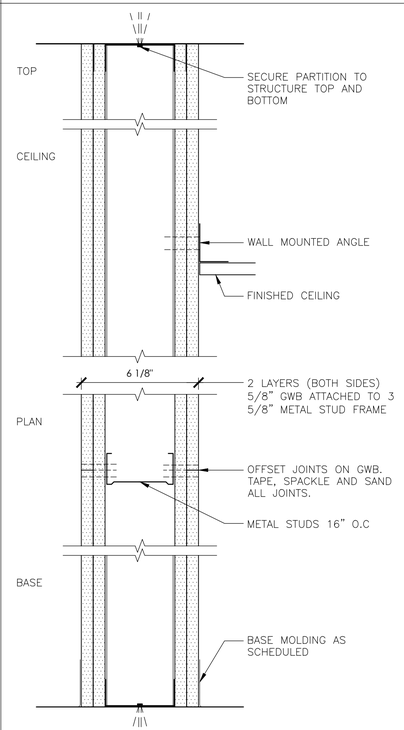

03 / A-400 2-HR RATED PARTITION
3" =1'-0"

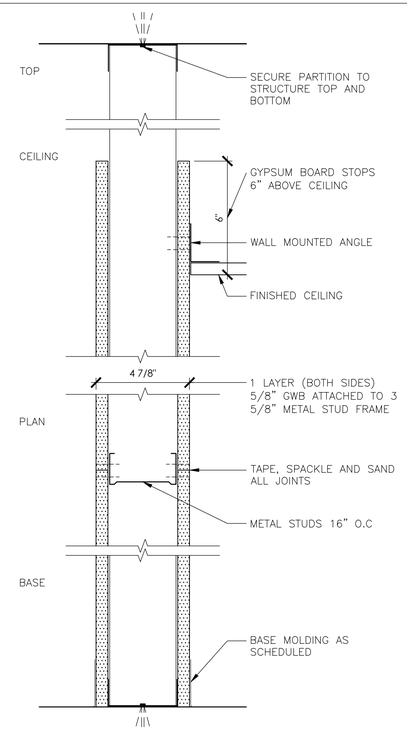

02 / A-400 NON-RATED PARTITION
3" =1'-0"

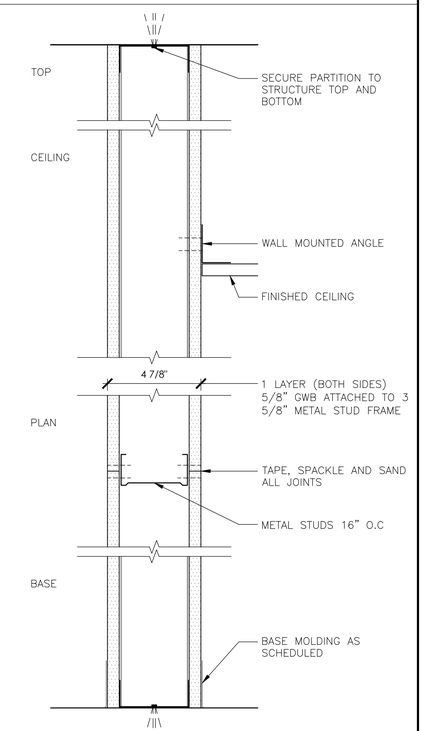

01 / A-400 1-HR RATED PARTITION
3" =1'-0"

NEW YORK CITY COLLEGE OF TECHNOLOGY 1881 CUNY

PROJECT NAME

Project Address:
285 JAY STREET
BROOKLYN NY, 10021

Architect:
Name
Address
Email

Rev. #	Description	Date

PARTITION TYPES

Project number	01.2014
Date	09.18.14
Drawn by	MARIE BARETSKY
Professor Name	KING

A-400

Scale 1 1/2" = 1'-0"