OBE RELIANCE GLASS CURTAIN WALL STUDY

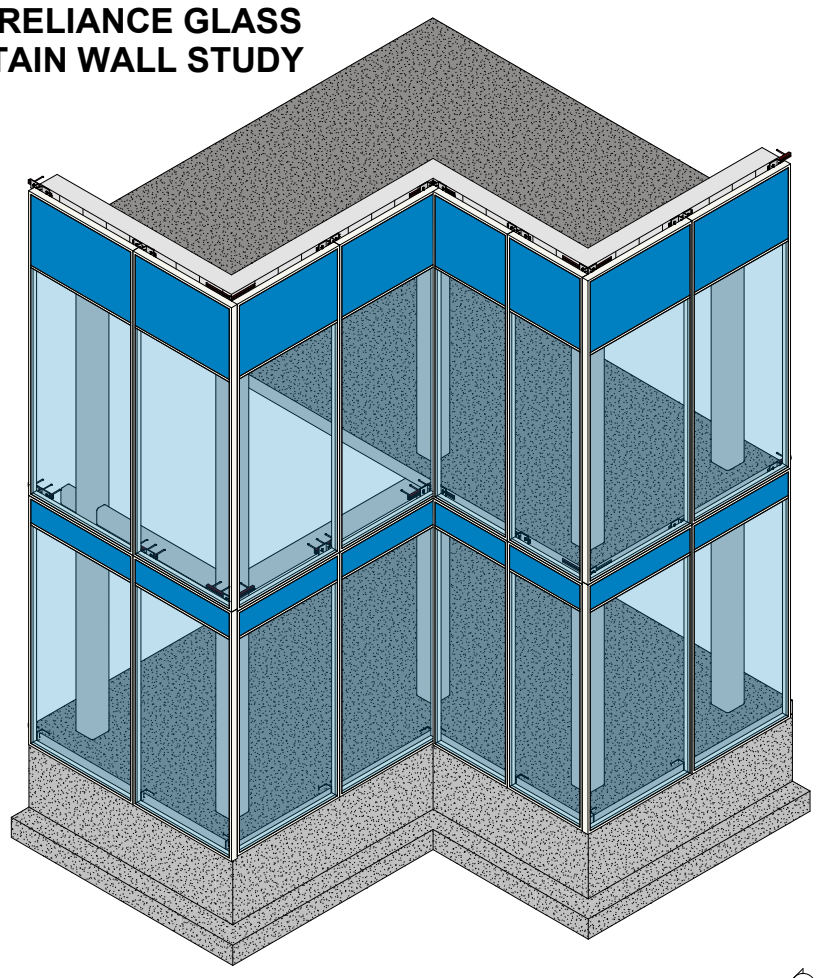

1 CURTAIN WALL AXON

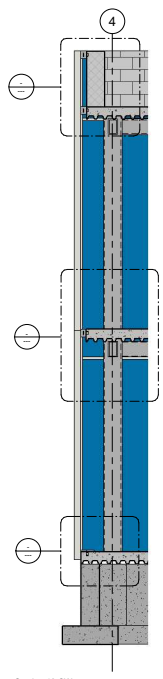

6 Section 12 CW
3/8" = 1'-0"

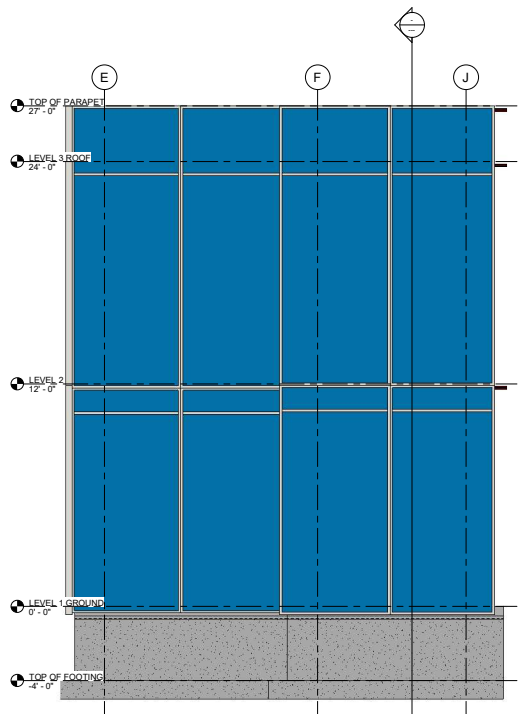

3 CURTAIN WALL front Elevation
3/8" = 1'-0"

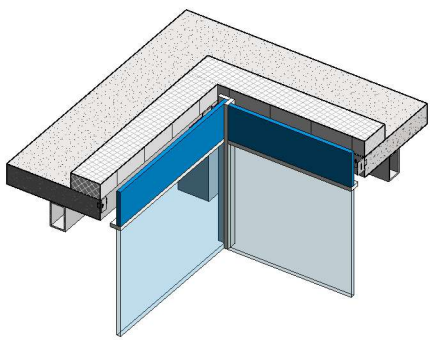

2 Inside Corner Isometric CW

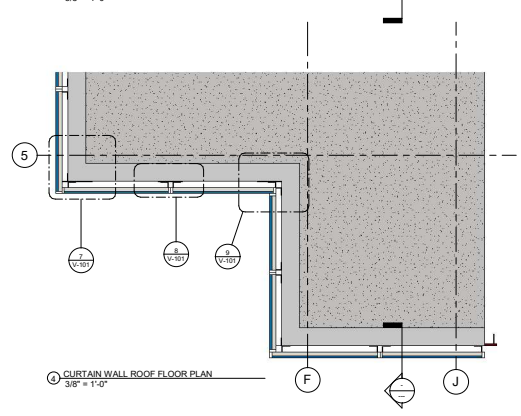

4 CURTAIN WALL ROOF FLOOR PLAN
3/8" = 1'-0"

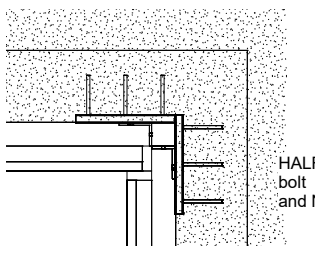

9 CURTAIN WALL INSIDE CORNER
1 1/2" = 1'-0"

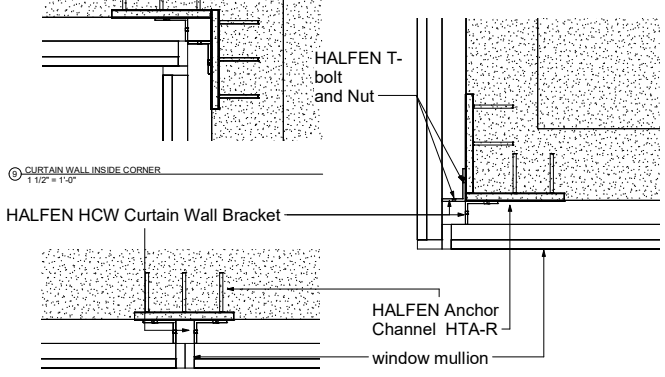

8 CURTAIN WALL MIDDLE CONDITION
1 1/2" = 1'-0"

7 CURTAIN WALL OUTSIDE CORNER
1 1/2" = 1'-0"

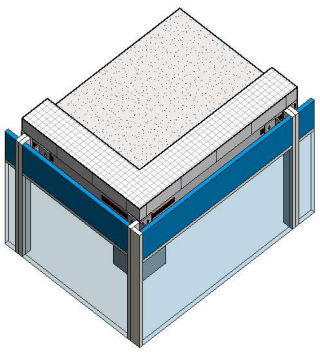

5 outside Corner Isometric CW

GLASS CURTAIN WALL STUDY	
Checked By	Checker
Drawn By	STUDENT NAME
Date	2/28/2020
Scale	As indicated
Project Number	V-101
Project Number	

Owner

Project Name

PROFESSOR PAUL KING

ARCH.2431 BUILDING TECHNOLOGY III

SECTION: ADD HERE

Tea Khabelashvili

5/19/2020 10:34:02 AM