CURTAIN WALL AND OPAQUE FACADE SYSTEMS

DOLMA TSERING
ARCH 2431
PROF. SHERMAN
SPRING 2020

GROUP MEMBERS - DREE-NICA, OUSMANI, ALBIJON, ZEQUAN

DRI-DESIGN METAL PANEL - VM ZINC METAL PANEL OPAQUE FACADE SYSTEM

CASE STUDY - ADOBE CORPORATE OFFICE

How does it function structurally? or how does it attach to the building?

- USES SUBSTRATE BEHIND THE METAL PANEL SUCH AS ⅝” PLYWOOD DENSGLASS GOLD AND EXTERIOR GYPSUM BOARD
- STEEL FASTENERS FOR PLYWOOD
- HAT GRIT OR FLAT STRAP IS REQUIRED FOR DENSGLASS GOLD AND EXTERIOR GYPSUM BOARD
- LIGHTS, SIGNS AND RAILINGS IS INSTALLED BEHIND THE METAL PANELS.
- PANELS HAVE INTERLOCKING GUTTER AND DRAINAGE SYSTEMS TO THE PANEL WITH SINGLE HORIZONTAL ATTACHMENT FOR DRY- JOINT RAINSCREEN ASSEMBLY.
- ATTACHED WALL PANELS USING PROGRESSIVE INTERLOCKING METHOD, WORKING FROM BOTTOM TO TOP AND LEFT TO RIGHT.

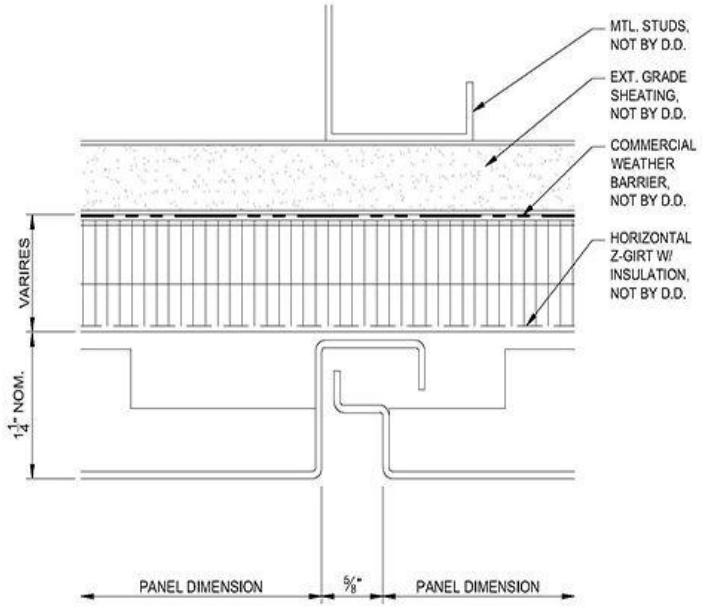

TYPICAL VERTICAL JOINT DETAIL

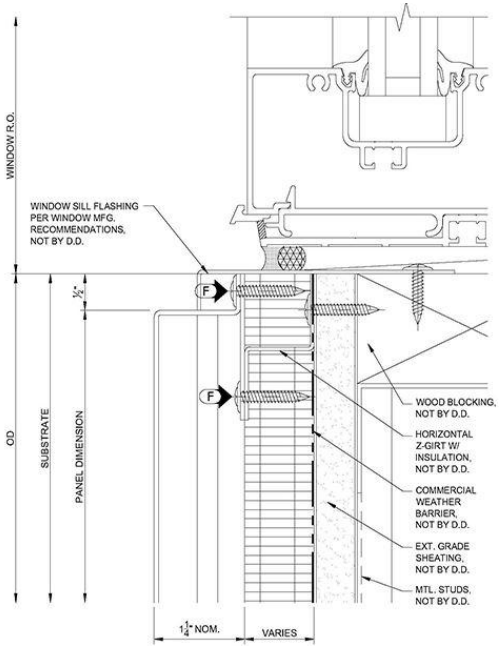

PANEL HEAD AT STOREFRONT SILL DETAIL

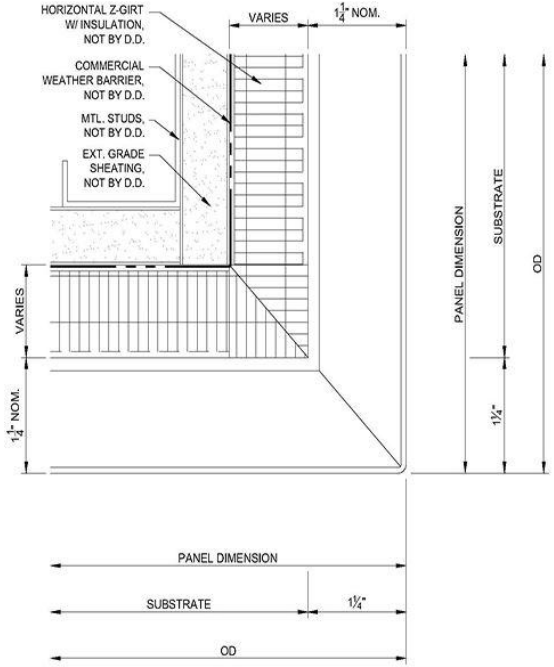

90 DEGREES OUTSIDE DETAIL

How does it provide thermal resistance? or how is it insulated? where do we see thermal bridges or thermal breaks?

- INSTALLED WITH PRE PUNCHED HOLES TO ALLOW INDIVIDUAL PANEL TO COMPENSATE FOR THERMAL EXPANSION.
- PROVIDES HIGHLY EFFICIENT SOUNDPROOFING AGAINST AIRBORNE NOISE
- HAVE INCREASED THICKNESS OF THERMAL INSULATION

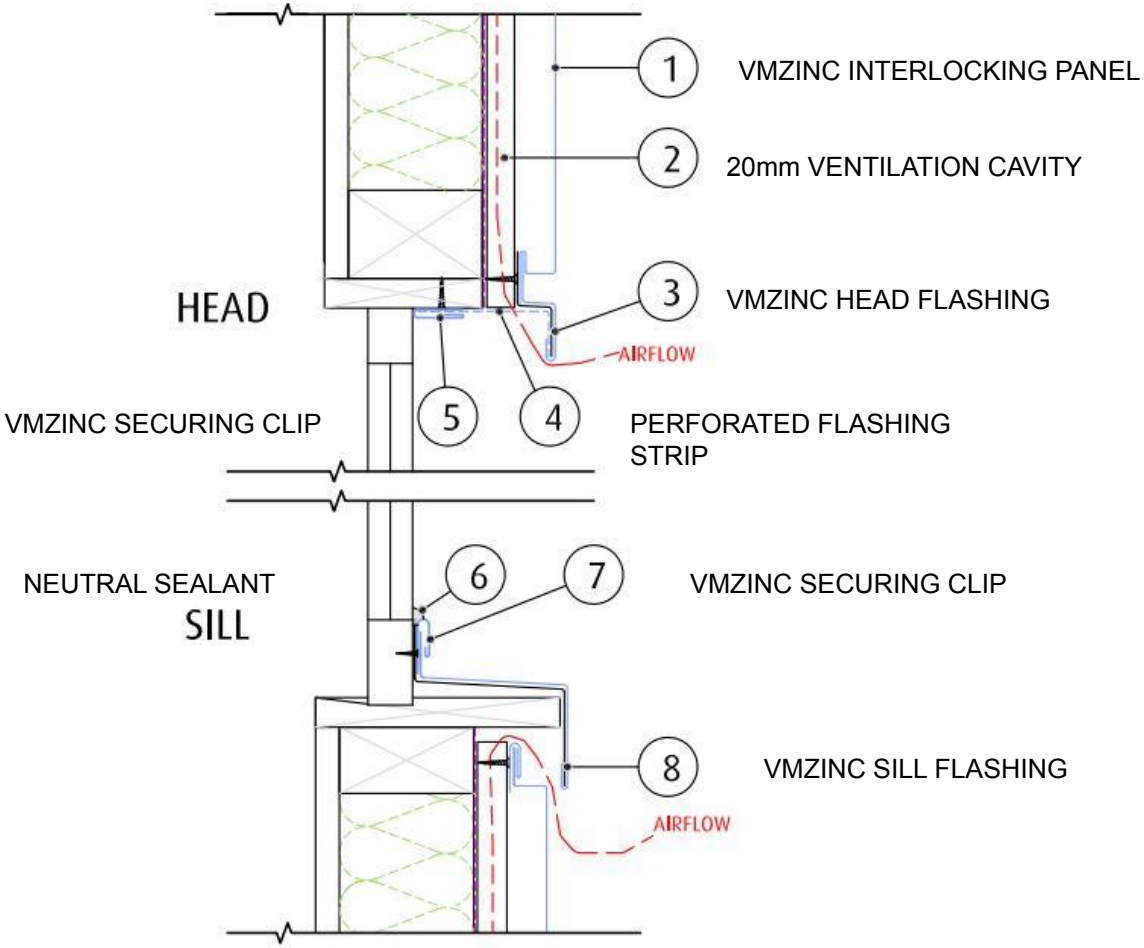

WINDOW HEAD AND SILL DETAIL

How does it waterproof the building? To fully waterproof a building we must look at the roof, the facade & windows & the foundation – all sides of the building.

- VMZINC PANELS ARE VENTILATED TO ALLOW CO2 TO ALLOW THE FORMATION OF PROTECTIVE PATINA
- PROTECTIVE COATING ON THE UNDERSIDE APPLIED IN THE FACTORY
- INSTALLATION OF WATERTIGHT VMZINC ROOF TO PREVENT ANY RAINWATER OR SNOW LEAKAGES
- USE OF VAPOR RETARDANT OR WATERPROOF MEMBRANES TO LIMIT THE TRANSFER OF WATER VAPOR

YOUTUBE VIDEOS

https://www.youtube.com/watch?v=rtxSy6aXkZc

https://www.youtube.com/watch?v=bsEmHUffNGQ

SOURCES

https://www.vmzinc.com/zinc-qualities.html

https://www.dri-design.com/details-specs/access-details/

KAWNEER - 1600 SCREW SPLINE CURTAIN WALL SYSTEM

CASE STUDY - GREEN GATE

How does it function structurally? or how does it attach to the building?

- USES SCREW SPLINE JOINERY
- PRODUCT IS PRE- ASSEMBLED, JOINT SEALED AND SENT TO JOB SITE AS LARGE UNITS.
- INTERLOCKING MULLION DESIGN TO ELIMINATE NEED FOR ANTI-BUCKING CLIPS
- PERIMETER SEAL INSTALLED AT PRESSURE POINT OR MULLION SHOULDER

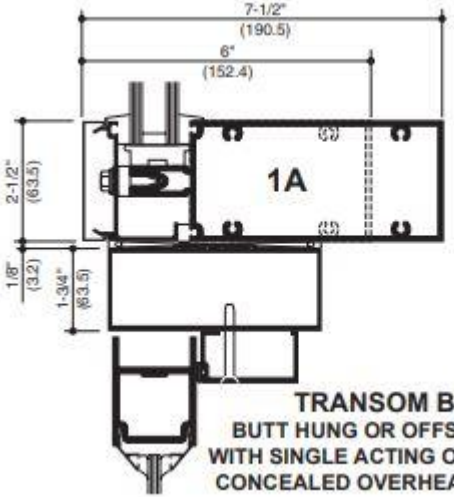

TRANSOM BAR
BUTT HUNG OR OFFSET PIVOT
WITH SINGLE ACTING OFFSET AR
CONCEALED OVERHEAD CLOSE

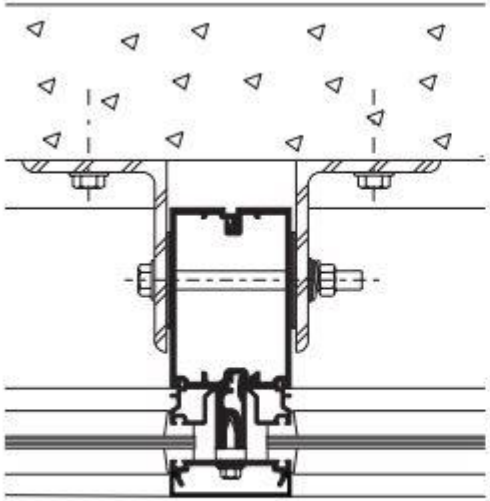

ANCHORING TO FLOOR SLAB

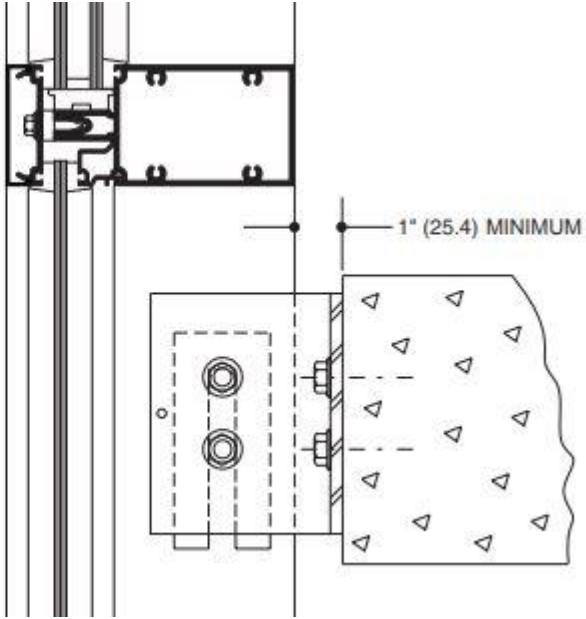

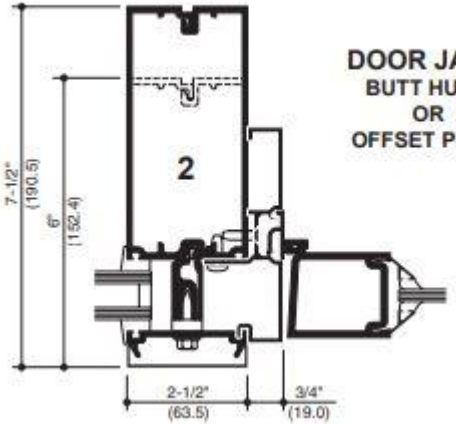

DOOR JAMB
BUTT HUNG
OR
OFFSET PIVOT

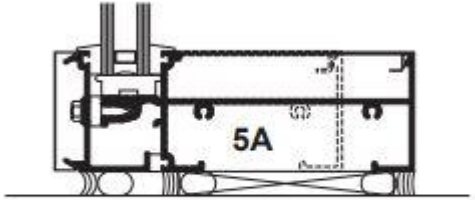

PERIMETER
PRESSURE PLATE

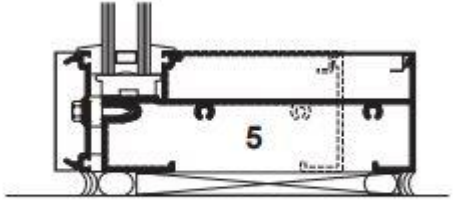

PERIMETER MULLION

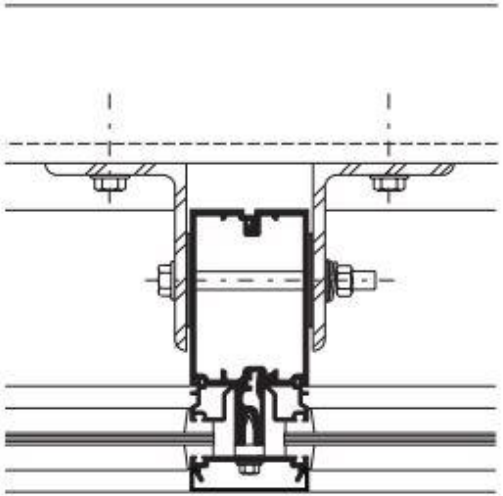

ANCHORING TO SUPPORT STEEL

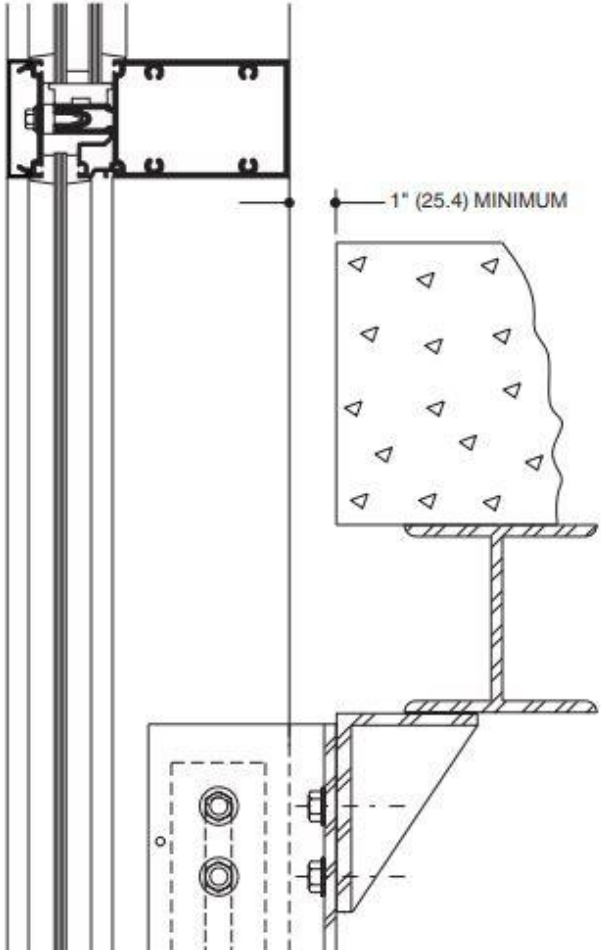

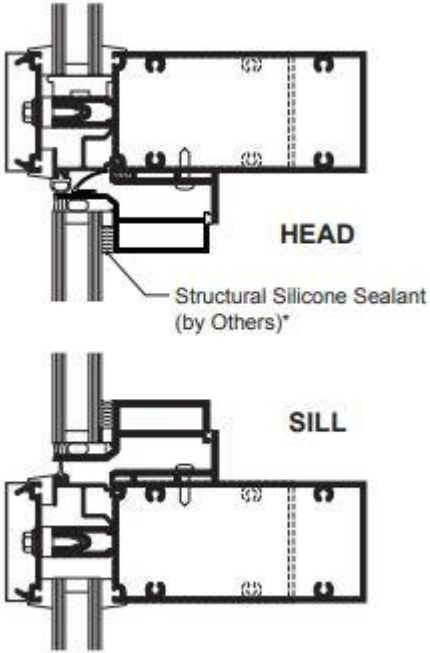

How does it provide thermal resistance? or how is it insulated? where do we see thermal bridges or thermal breaks?

- CAPTURED SYSTEM THERMAL SEPARATOR PRE- INSTALLED INTO PRESSURE PLATE
- THERMAL SEPARATOR EXTRUDED OF A SILICONE COMPATIBLE ELASTOMER THAT PROVIDES ¼” SEPARATION
- EPDM GASKET AND THERMAL BREAK

How does it waterproof the building? To fully waterproof a building we must look at the roof, the facade & windows & the foundation – all sides of the building.

- EACH LIGHT OF GLASS IS COMPARTMENTALIZED USING JOINT PLUGS AND SILICONE SEALANT TO DIVERT WATER TO HORIZONTAL WEEP LOCATIONS
- WEEP HOLES LOCATED IN THE HORIZONTAL PRESSURE PLATES AND COVERS TO DIVERT WATER TO THE EXTERIOR OF THE BUILDING

MATERIALS ON YOUTUBE

YOUTUBE VIDEOS

https://www.youtube.com/watch?v=KYXpMkujo_8

https://www.youtube.com/watch?v=KLAXo43k8ik

SOURCES

https://www.kawneer.com/kawneer/cad_na/3185/999_Specifications/SPCD060EN_1600%20SS%20Curtain%20Wall%20System%20-%20English/SPCD060EN.pdf

https://www.kawneer.com/kawneer/north_america/en/product_category.asp?cat_id=1992&desc=traditional-curtain-wall-system