PRODUCED BY AN AUTODESK EDUCATIONAL PRODUCT

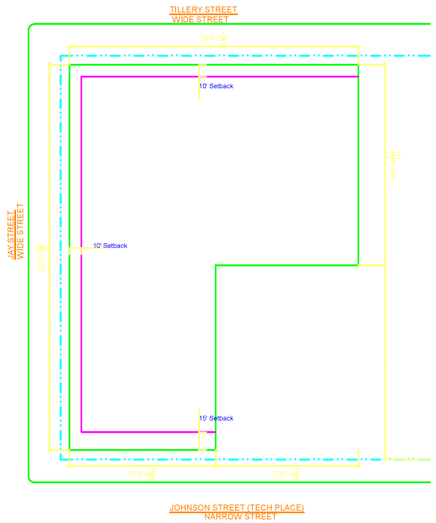

01 A-100 SITE PLAN DIAGRAM
1/64"=1'0"

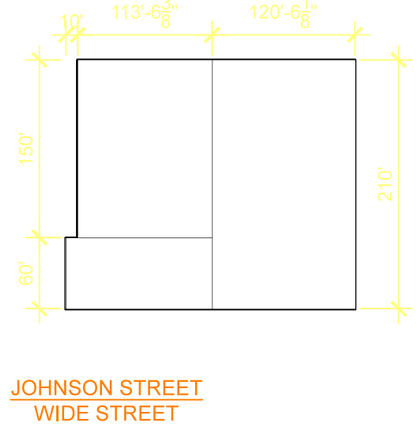

02 A-100 ELEVATION DIAGRAM
1/64"=1'-0"

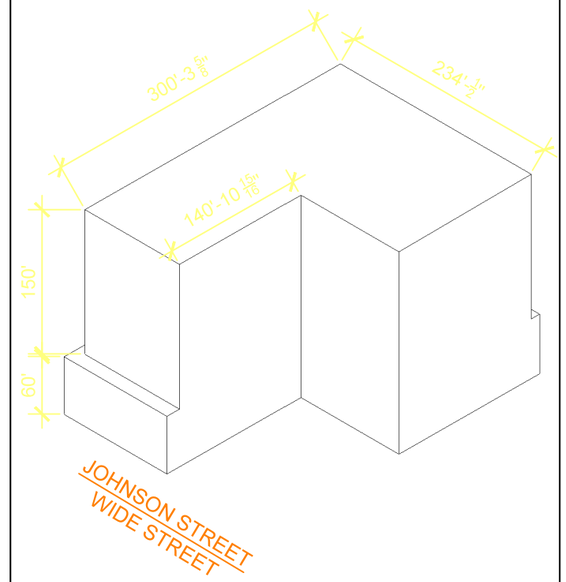

03 A-100 AXONOMETRIC SOUTHERN VIEW
NTS

PRIMARY ZONING: C6-4

PUBLIC FACILITY/ INSTITUTION

PROPOSED BUILDING

MAXIMUM BUILDING ENVELOPE

BUILDING SETBACK

04 A-100 LEGEND
1/64"=1'0"

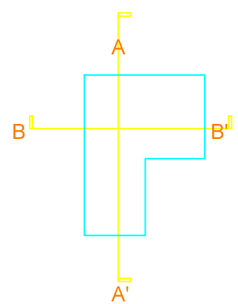

05 A-100 ELEVATION VIEW DIAGRAM
1/64"=1'-0"

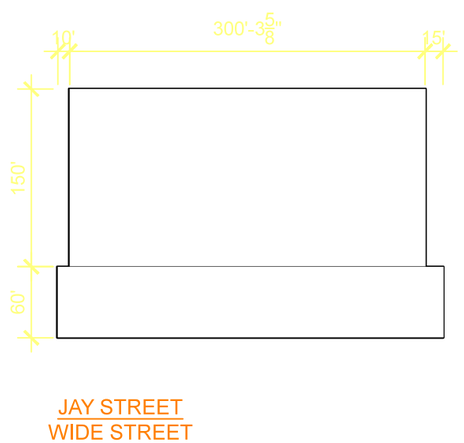

06 A-100 ELEVATION DIAGRAM
1/64"=1'-0"

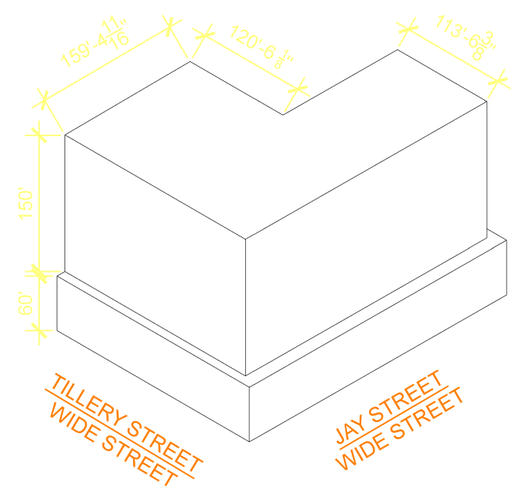

07 A-100 AXONOMETRIC NORTHERN VIEW
NTS

ZONING REFERENCE

SITE DETAILS:

Location: 285 Jay Street, Brooklyn N.Y. 11201
Year Built: 1908
Lot Area: 60,597 sq.ft
Primary Zoning: C6-4
Zoning Map: 12d
Floor Area Ratio (F.A.R.): 10

SITE REGULATIONS:

Article II

Section 23-145

For Quality Housing buildings

Districts: R6, R7, R8, R9, R10

In the districts indicated, the maximum residential lot coverage and the maximum floor area ratio for a zoning lot where Quality Housing buildings are developed or enlarged shall be as set forth in the following table. The maximums for zoning lots, or potions thereof, located within 100 feet of a wide street in R6, R7 or R8 Districts without a letter suffix outside the Manhattan Core located within 100 feet of a wide street, the maximums shall be indicated by the same district with a double asterisk.

MAXIMUM LOT COVERAGE AND FLOOR AREA RATIO FOR QUALITY HOUSING BUILDINGS (in percent)

	Maximum Lot Coverage		
District	Corner Lot	Interior Lot or Through Lot	Maximum Floor Area Ratio
R6	80	60	2.20
R6**	80	60	2.43
R6*, R6A, R7B	80	65	3.00
R6B	80	60	2.00
R7	80	65	3.44
R7*, R7A	80	65	4.00
R7D	80	65	4.20
R7X	80	70	5.00
R8, R8A, R8X	80	70	6.02
R8*	80	70	7.20
R8B	80	70	4.00
R9, R9A	80	70	7.52
R9D, R9X	80	70	9.00
R10	100	70	10.00

ZONING

Address:
285 JAY STREET
BROOKLYN, NEW YORK

No.DescriptionDate

ZONING

Project number
Date 05/23/2013
Drawn by RAFAEL ESPAILLAT
Professor Name KING
Checked by Checker

A-100

Scale 1/64"=1'-0"

Grade

PRODUCED BY AN AUTODESK EDUCATIONAL PRODUCT
PRODUCED BY AN AUTODESK EDUCATIONAL PRODUCT
PRODUCED BY AN AUTODESK EDUCATIONAL PRODUCT