ARCHITECTS

GLASS CURTAIN WALL

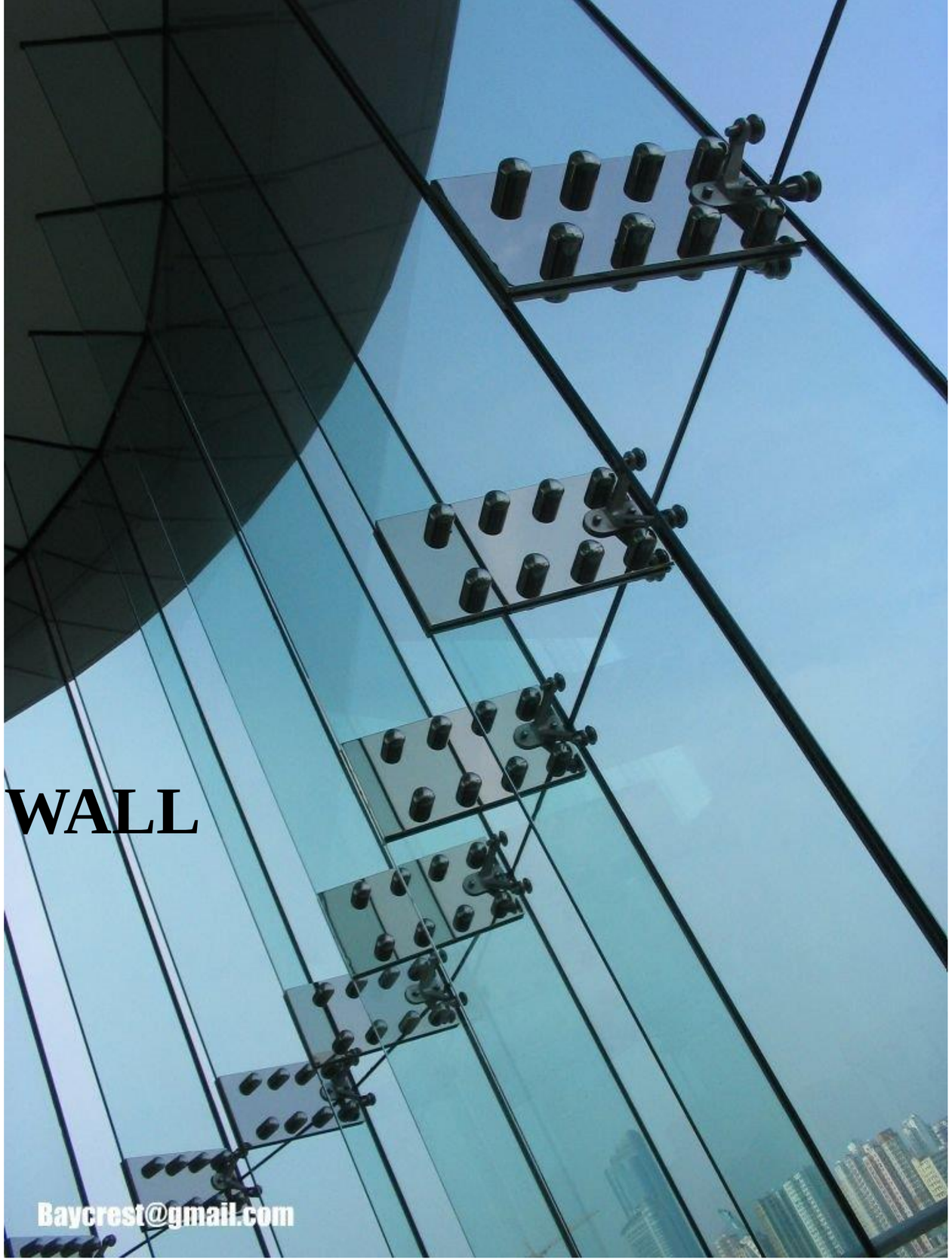

Content

Glass Curtain Wall

- **Overview**

Research topics

- **Attachment Systems**
- **Air Barriers and Sealants**

Case study I

- **Rain Penetration and moisture control**
- **System joints and connections**

Case study II

- **Thermal Insulation and R values**
- **Systems Comparisons**

Metal Panel, rigid with Insulation

Research topics

- **Attachment System**
- **Air Barriers and Sealants**

Case study I

- **Rain Penetration and moisture control**
- **System joints and connections**

Case study II

- **Thermal Insulation and R values**
- **Systems Comparisons**

Stick Systems

Unit Systems

Unit-and-Mullion Systems

Column-Cover-and-Spandrel Systems

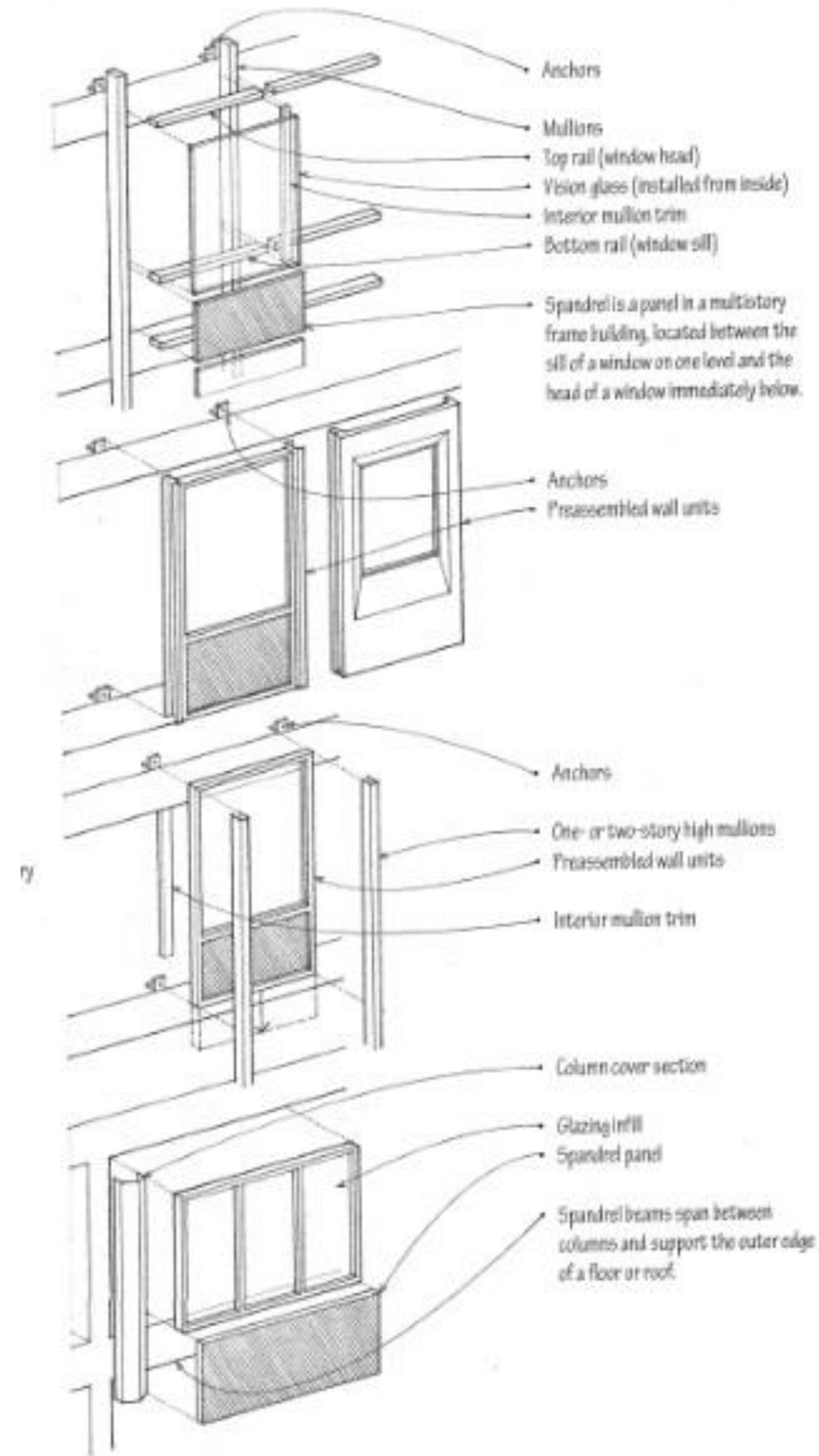

Building Construction Illustrated, Pg. 8.31

Typ. Conditions of glazed curtain wall construction

Content

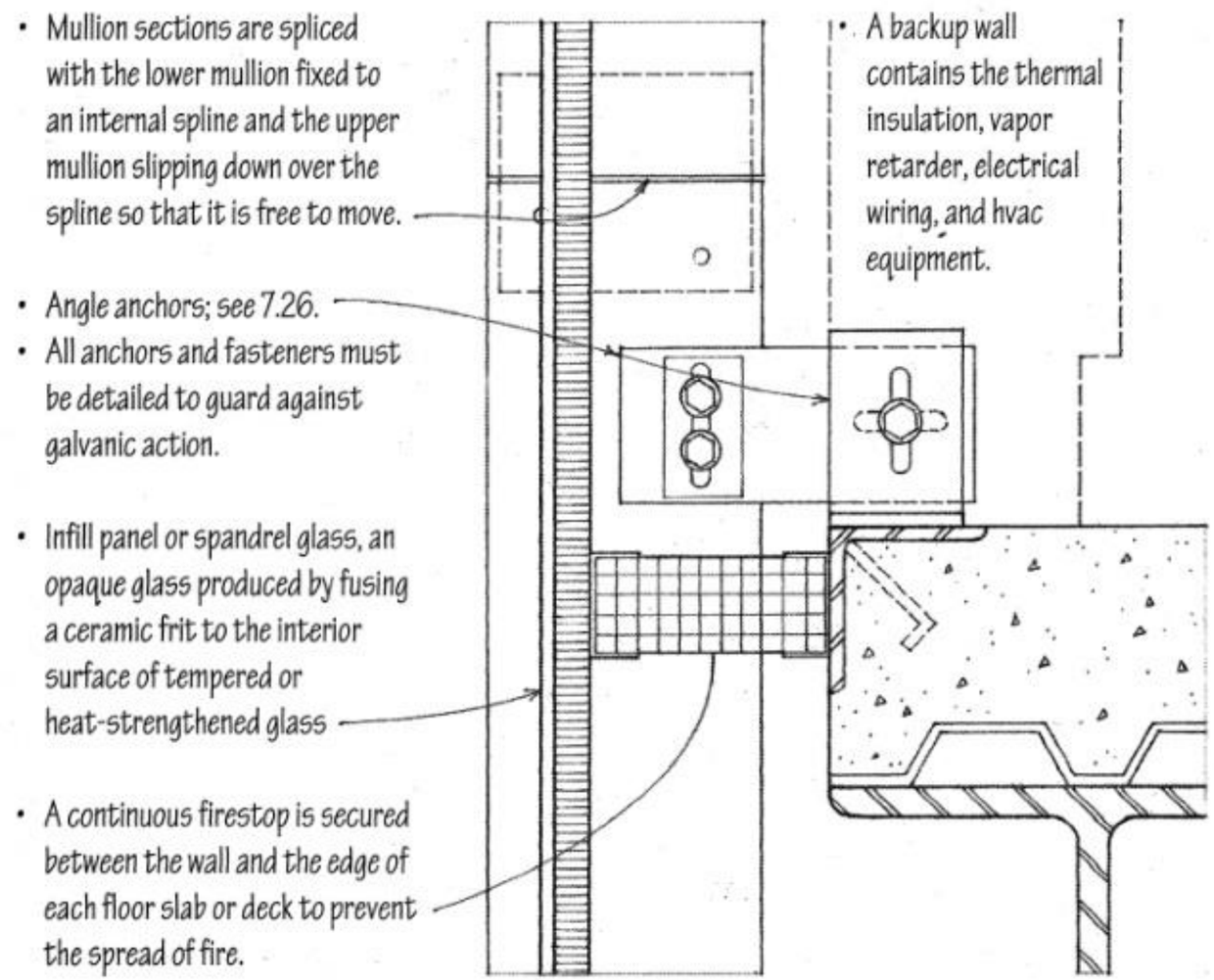

Building Construction Illustrated, Pg. 8.32

Air Barriers & Sealants

Content

*Air barrier materials act to reduce air leakage through a building assembly.
*Sealant is a rubberlike, adhesive material, usually applied in liquid or tape form used to seal a joint, gap, or crack against the passage of air and moisture.

Ex.' s of air barrier materials:

Building wrap
gyp wallboard
polyethylene sheet plastic
Rigid foam insulation
liquid-applied membranes of various formulations,
caulking
Sealants
Gaskets
tapes and more.

Content

Glass Curtain Wall

- **Overview**

Research topics

- **Attachment Systems**
- **Air Barriers and Sealants**

Case study I

- **Rain Penetration and moisture control**
- **System joints and connections**

Case study II

- **Thermal Insulation and R values**
- **Systems Comparisons**

Metal Panel, rigid with Insulation

Research topics

- **Attachment System**
- **Air Barriers and Sealants**

Case study I

- **Rain Penetration and moisture control**
- **System joints and connections**

Case study II

- **Thermal Insulation and R values**
- **Systems Comparisons**

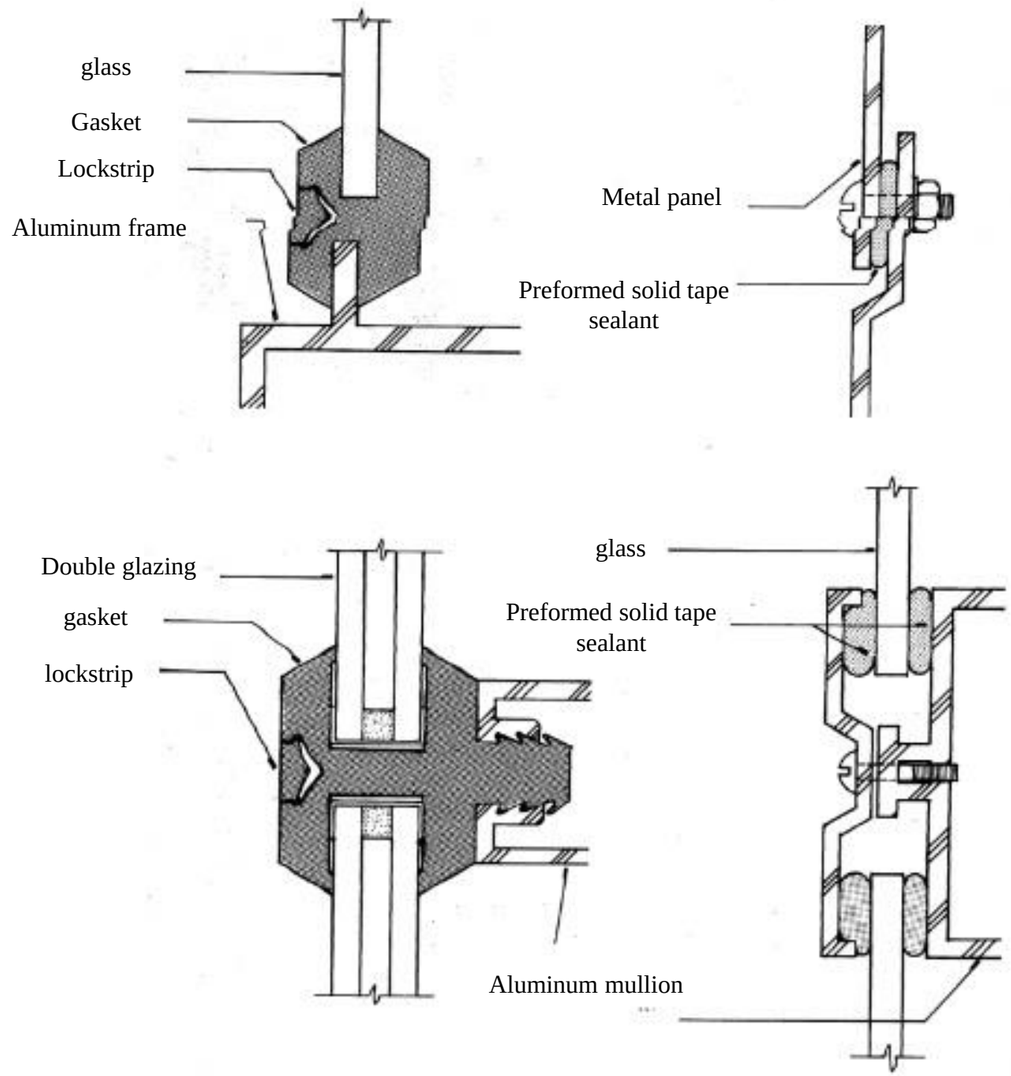

FIGURE 19.11
Some solid sealant materials. At the left, two examples of lockstrip gaskets. At the right, preformed solid tape sealants.

Gaskets-strips of various fully cured elastomeric (rubberlike) materials manufactured in several different configurations and sizes for diff. purposes diff. configurations and sizes.

Preformed solid tape sealants- are used only in lap joints, as in mounting glass in a metal frame or overlapping two thin sheets of metal a ta cladding seam

Content

Glass Curtain Wall

- **Overview**

Research topics

- **Attachment Systems**
- **Air Barriers and Sealants**

Case study I

- **Rain Penetration and moisture control**
- **System joints and connections**

Case study II

- **Thermal Insulation and R values**
- **Systems Comparisons**

Metal Panel, rigid with Insulation

Research topics

- **Attachment System**
- **Air Barriers and Sealants**

Case study I

- **Rain Penetration and moisture control**
- **System joints and connections**

Case study II

- **Thermal Insulation and R values**
- **Systems Comparisons**

Toyo Ito

Sendai Mediatheque
Location: Sendai-shi, Japan

http://angelamckenziedesign.blogspot.com/2013/03/toyo-ito-wins-pritzker-prize.html

Content

Glass Curtain Wall

- **Overview**

Research topics

- **Attachment Systems**
- **Air Barriers and Sealants**

Case study I

- **Rain Penetration and moisture control**
- **System joints and connections**

Case study II

- **Thermal Insulation and R values**
- **Systems Comparisons**

Metal Panel, rigid with Insulation

Research topics

- **Attachment System**
- **Air Barriers and Sealants**

Case study I

- **Rain Penetration and moisture control**
- **System joints and connections**

Case study II

- **Thermal Insulation and R values**
- **Systems Comparisons**

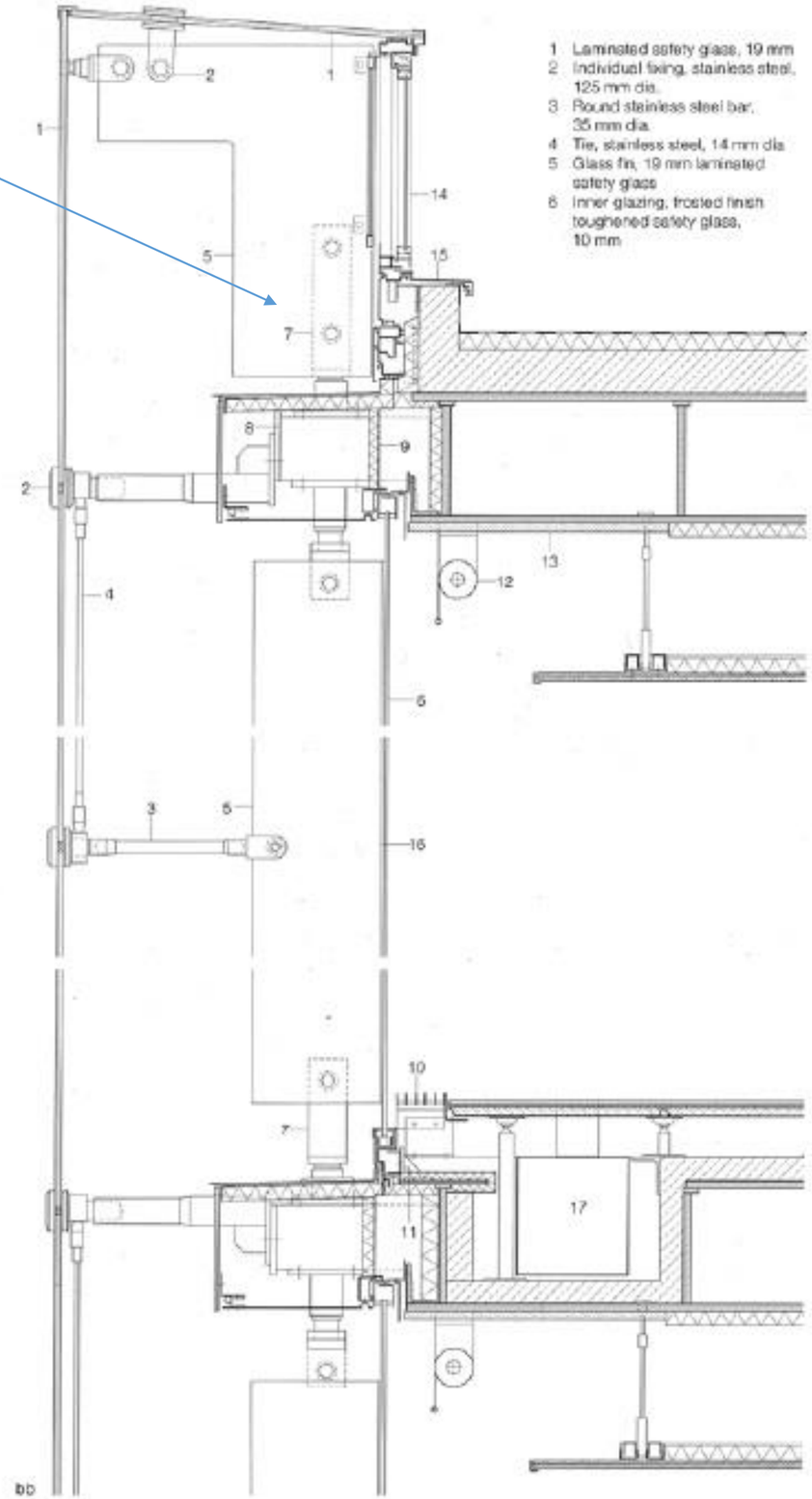

http://iris.nyit.edu/~maltwick/DESIGN%206/ALL%20SECTIONS/lectures/Facades-Terzich-NYIT%5B1%5D.pdf

ARCHITECTS

Content

Wind

Wind can create both positive and negative pressure on a wall, depending on its direction and the shape and height of the building.
The wall must be able to transfer any wind loads to the structural frame of the building without excessive deflection. Wind-induced movement of the wall should be anticipated in the design of its joints and connections.

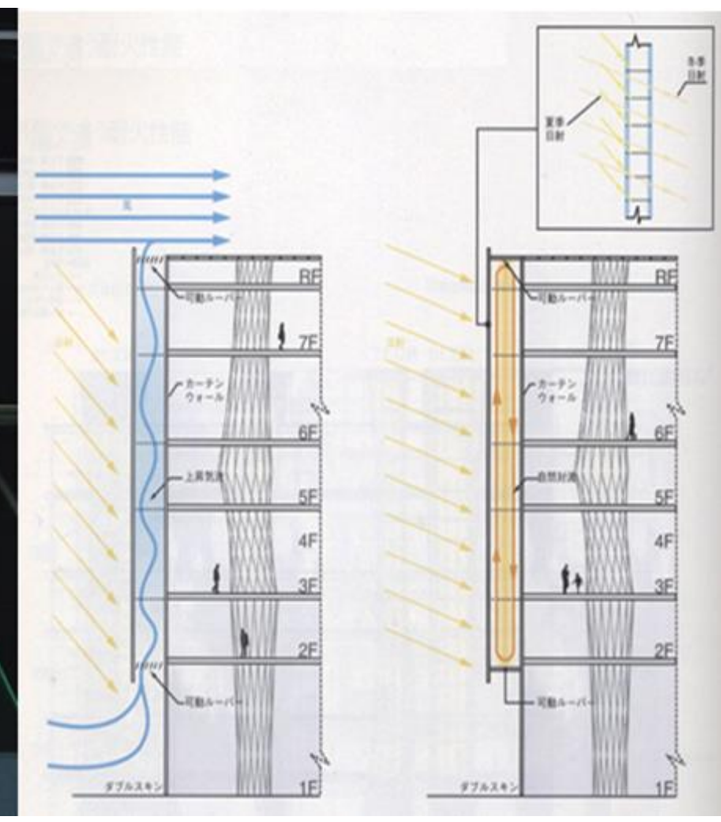

CURTAIN WALL

Content

What is a curtain wall?

It is the exterior wall or covering of a building where by the wall is non-structural.

Although the term is sometimes restricted to metal framed curtain walls,

the above definition embraces many different construction methods and materials including non-loadbearing precast concrete.

Characteristics of a curtain wall.

•Typically non-structural.

•Keeps people in and weather out.

•Allows for the penetrations of natural light into the building.

•Doesn't carry any dead weight from the building besides its own dead weight.

Curtain walls differ from store-front systems in that they are designed to span multiple floors, and take into consideration design requirements such as: thermal expansion and contraction building sway and movement; water diversion; and thermal efficiency for cost-effective heating, cooling, and lighting in the building.

Types

Stick curtain wall

Unitized curtain wall

Panelized curtain wall

Spandrel panel ribbon glazing

Structural sealant glazing

Structural glazing

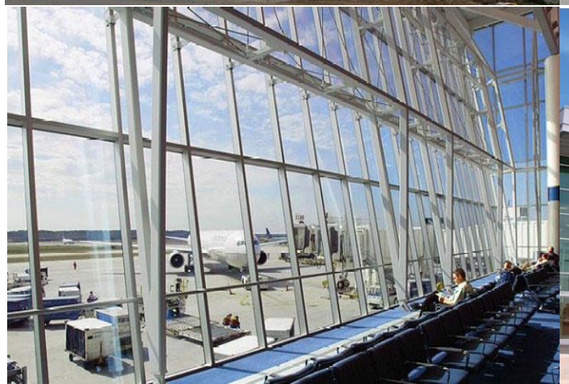

CURTAIN WALL

Rain Penetration

Content

In most curtain wall systems the joint between the infill panel (i.e., window or spandrel panel)
and the structural mullion is usually designed to be part of a rain screen system

- A pressure-equalized cavity, connected to the exterior by the drain holes in the exterior caps, and a pressure equalized rain deflector seal between the outside surface of the glass and the mullion cap.
- The chamber portion of the cavity is composed of the air seals connecting the inside face of the window glass and the spandrel panel metal pan, to the shoulder flanges of the structural mullion and other parts of the structural section

- Controlled water penetration is water that pass through the inner most vertical plan of a test specimen but designed in a way to drain it back out
- AAMA allows controlled water penetration while ASTM deems it a failure.

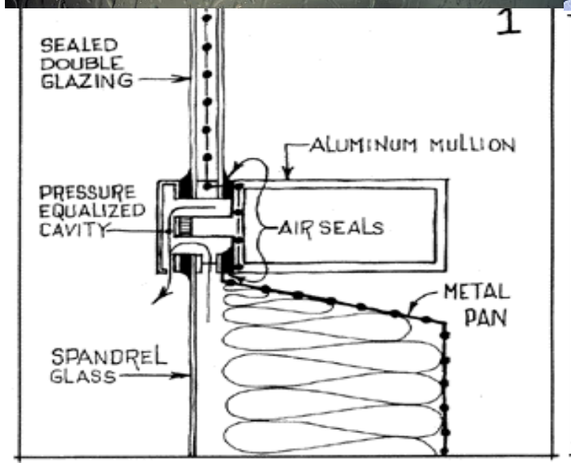

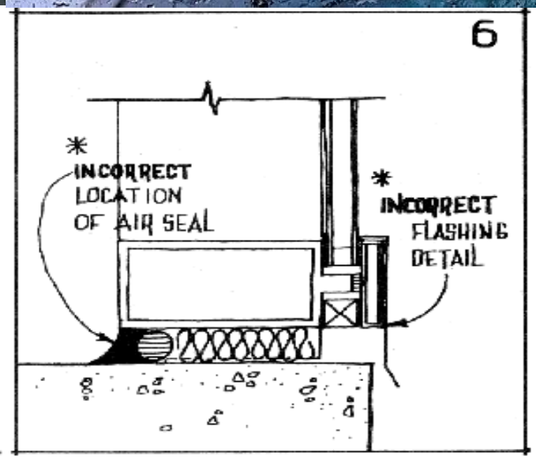

CURTAIN WALL

CURTAIN WALL

Rain Penetration

Content

Glass Curtain Wall

- **Overview**

Research topics

- **Attachment Systems**
- **Air Barriers and Sealants**

Case study I

- **Rain Penetration and moisture control**
- **System joints and connections**

Case study II

- **Thermal Insulation and R values**
- **Systems Comparisons**

Metal Panel, rigid with Insulation

Research topics

- **Attachment System**
- **Air Barriers and Sealants**

Case study I

- **Rain Penetration and moisture control**
- **System joints and connections**

Case study II

- **Thermal Insulation and R values**
- **Systems Comparisons**

The testing method mostly used for testing installed windows is **ASTM E1105 Water Spray rack System**

Standard Test Method for Field Determination of Water Penetration of Installed Exterior Windows, Skylights, Doors, and Curtain Wall when water is applied using a calibrated spray apparatus while simultaneously applying uniform or cyclic static pressure to opposite sides of the test specimen by Uniform or Cyclic Static Air Pressure is the “go to” standard when field testing newly installed fenestration products.

CURTAIN WALL

Connection

Content

Glass Curtain Wall

- **Overview**

Research topics

- **Attachment Systems**
- **Air Barriers and Sealants**

Case study I

- **Rain Penetration and moisture control**
- **System joints and connections**

Case study II

- **Thermal Insulation and R values**
- **Systems Comparisons**

Metal Panel, rigid with Insulation

Research topics

- **Attachment System**
- **Air Barriers and Sealants**

Case study I

- **Rain Penetration and moisture control**
- **System joints and connections**

Case study II

- **Thermal Insulation and R values**
- **Systems Comparisons**

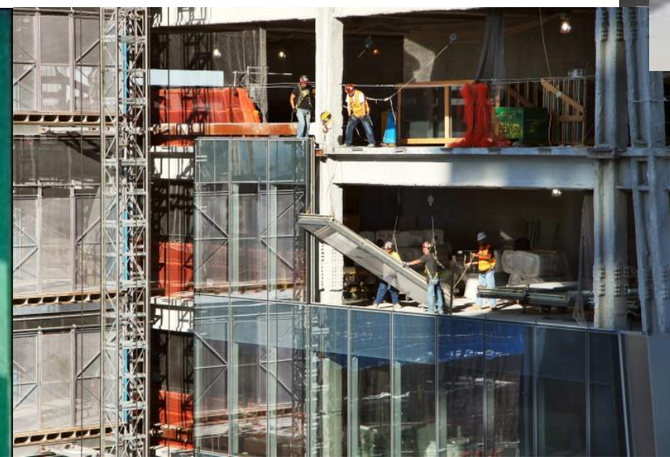

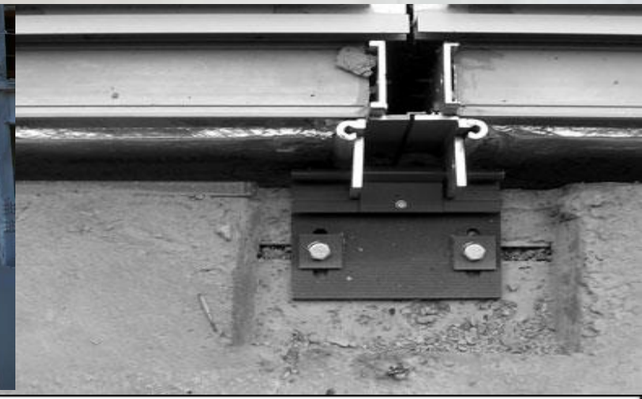

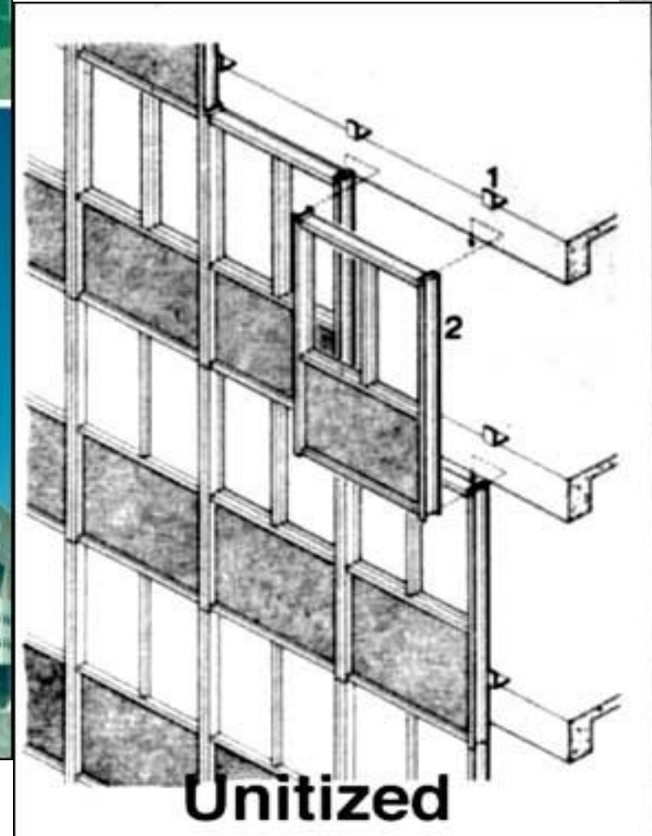

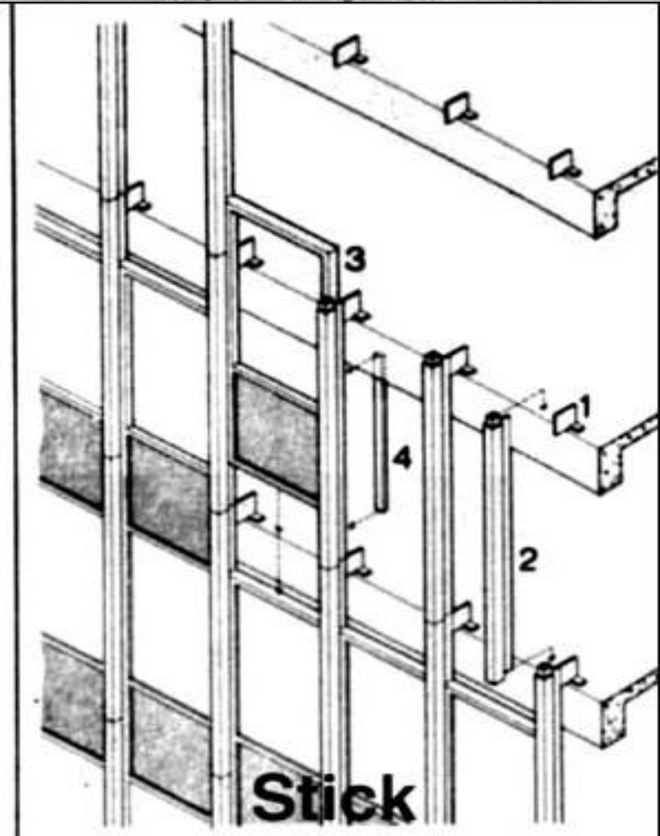

Content

Glass Curtain Wall

- **Overview**

Research topics

- **Attachment Systems**
- **Air Barriers and Sealants**

Case study I

- **Rain Penetration and moistu control**
- **System joints and connectio**

Case study II

- **Thermal Insulation and R values**
- **Systems Comparisons**

Metal Panel, rigid with Insulatio

Research topics

- **Attachment System**
- **Air Barriers and Sealants**

Case study I

- **Rain Penetration and moistu control**
- **System joints and connections**

Case study II

- **Thermal Insulation and R values**
- **Systems Comparisons**

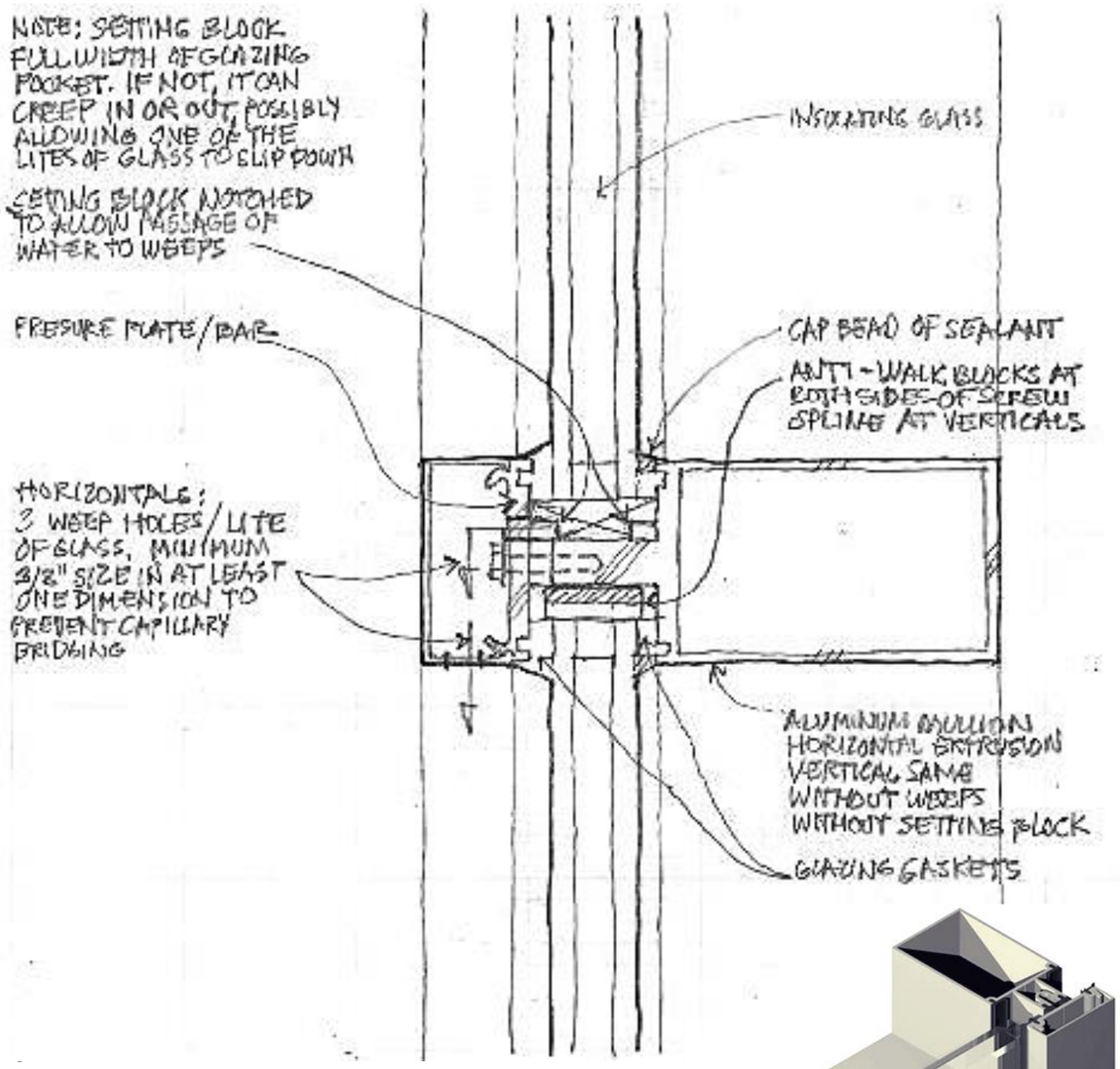

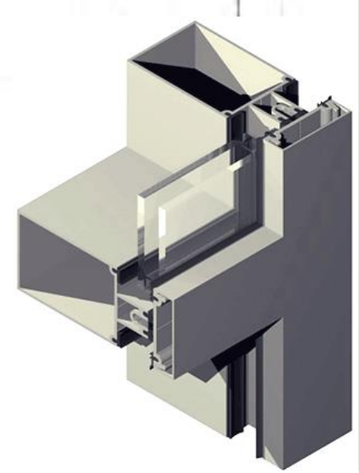

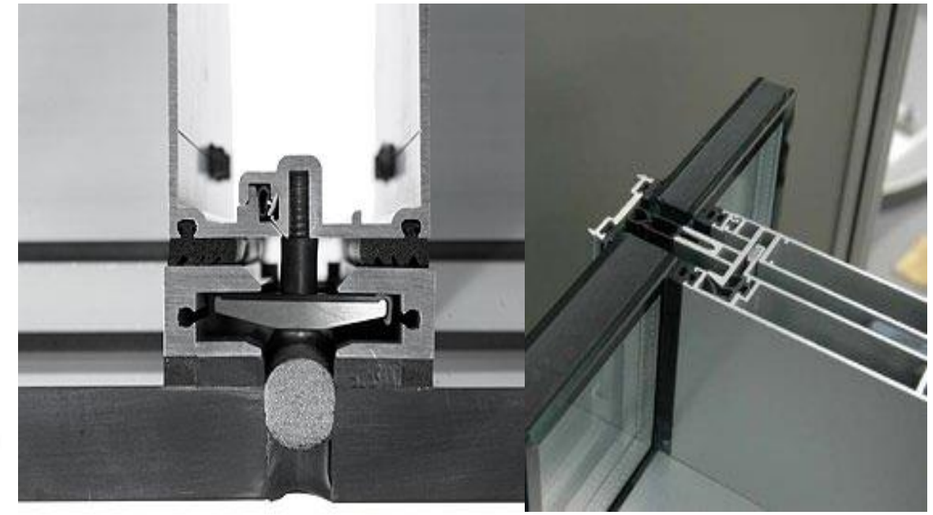

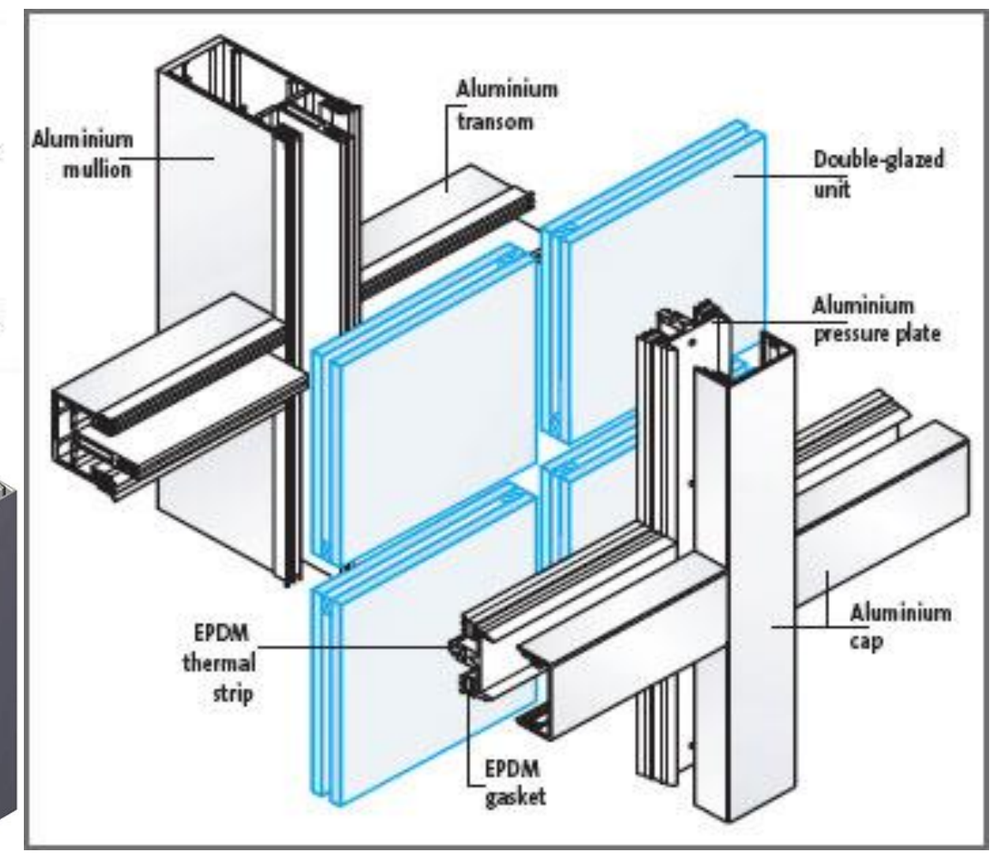

http://uk.saint-gobain-glass.com

Content

Glass Curtain Wall

- **Overview**

Research topics

- **Attachment Systems**
- **Air Barriers and Sealants**

Case study I

- **Rain Penetration and moisture control**
- **System joints and connections**

Case study II

- **Thermal Insulation and R values**
- **Systems Comparisons**

Metal Panel, rigid with Insulation

Research topics

- **Attachment System**
- **Air Barriers and Sealants**

Case study I

- **Rain Penetration and moisture control**
- **System joints and connections**

Case study II

- **Thermal Insulation and R values**
- **Systems Comparisons**

Case Study
Bank of America Tower

- 1.6 Million sq. ft. of low-e glass used in the curtain wall
- Frit pattern on glass covers approximately 30% of each curtain wall piece, reflecting 60% of light where the full pattern is used. Pattern opens up in middle to permit views out.
- Glazing covers the entire facade. In angled parts of the building the aluminum storefront holds the glass at the top of the structural space allowing more natural light into the space as shown in the diagram below .
- On floors that receive direct sunlight/have vertical shading, the extra light bounces deeper into the space due to the use of reflective materials.

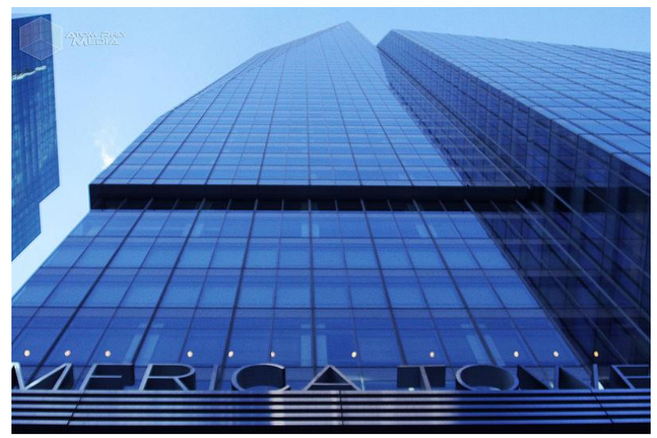

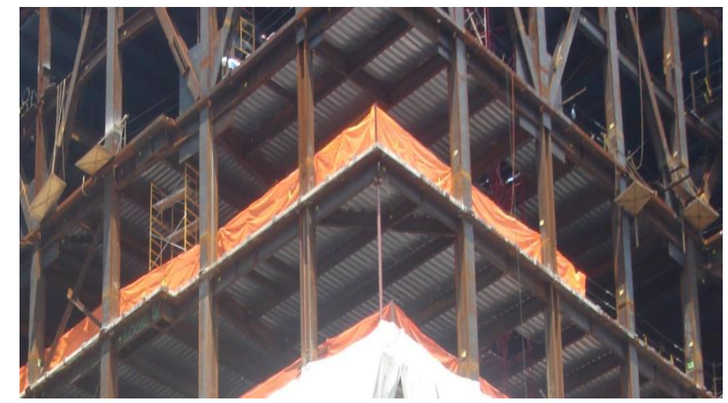

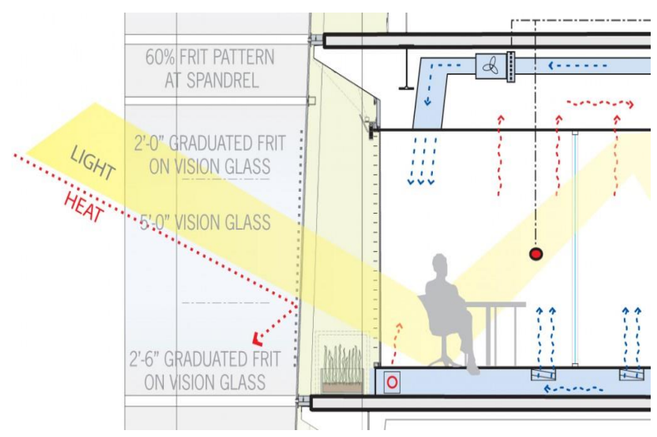

Content

Glass Curtain Wall

- **Overview**

Research topics

- **Attachment Systems**
- **Air Barriers and Sealants**

Case study I

- **Rain Penetration and moisture control**
- **System joints and connections**

Case study II

- **Thermal Insulation and R values**
- **Systems Comparisons**

Metal Panel, rigid with Insulation

Research topics

- **Attachment System**
- **Air Barriers and Sealants**

Case study I

- **Rain Penetration and moisture control**
- **System joints and connections**

Case study II

- **Thermal Insulation and R values**
- **Systems Comparisons**

- Open floor plans and open glazing around each floor allow natural light to penetrate deep into the offices. This lessens the need for artificial lighting, and adds a negligible amount of increased need for air conditioning because the building is internal load dominated (more energy is being used inside the building than is coming into the building via solar radiation or heat transfer).
- - Viracon glass used with frit pattern printed onto the low-e glass with an R-Value (a measure of efficiency in thermal resistance) of 3.84.
- The building's design has been criticised for its overuse of glazing. While the frit pattern and low-e design of the glass allows for less heat transmition into the building, many believe this much glazing is still excessive, especially for an internal-load dominated building. In practice, however, the building still uses less energy for lighting artificial and heating than the typical office-buiding.
- Motion sensors on the inside of

Case Study
Bank of America Tower

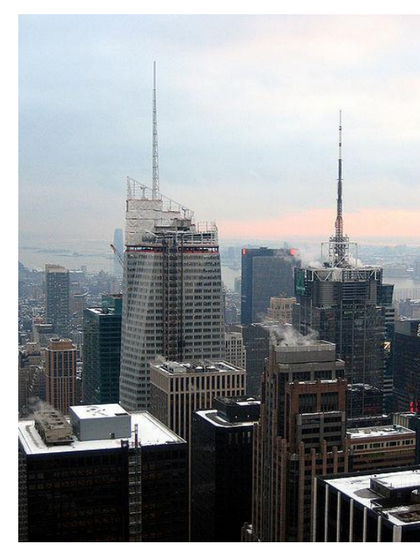

ARCHITECTS

Content

Exterior Wall Assembly Insulation

For commercial construction, the most common thickness are ¼ monolithic and 1 inch insulating glass. The ¼ inch glass is typically used only in spandrel areas, while insulating glass is used for the rest of the building. The 1 inch insulation glass is typically made up of two ¼ - inches lites of usually atmospherically air, in a residential construction , monolithic and 5/8 insulating glass.

An example of a method hiding spandrel areas is through *shadow box* construction (providing a dark enclosed space behind the transparent or translucent glass).

Shadow box Spandrel

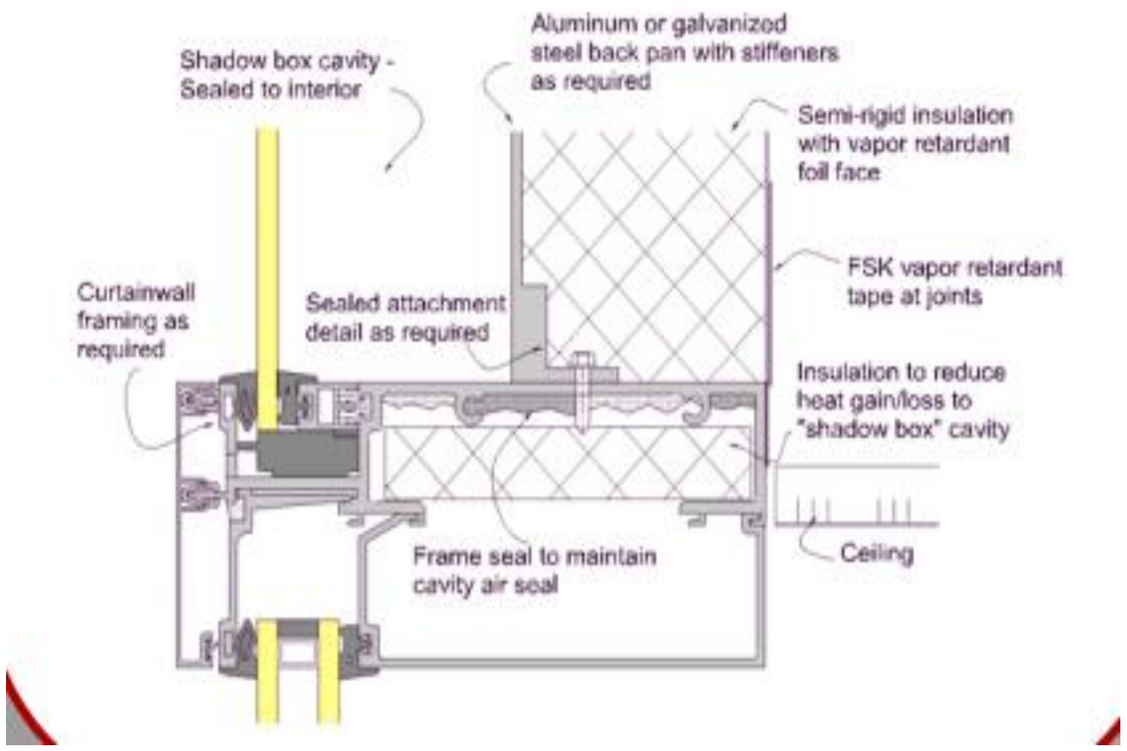

ARCHITECTS

Thermal Insulation

Content

What is thermal insulation?

Thermal insulation is the reduction of heat transfer (the transfer of thermal energy between objects of differing temperature) between objects in thermal contact or in range of radioactive influence.

Ex:

An manufacture that create glass curtain wall with thermal insulation is Kawneer's 1600UT Curtain Wall System is designed to proactively address code requirements, including the International Energy Conservation Code

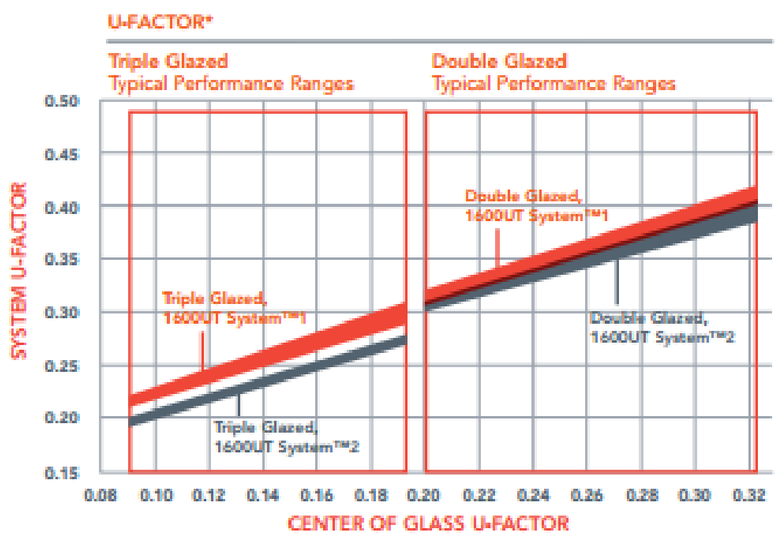

Thermal insulation performance

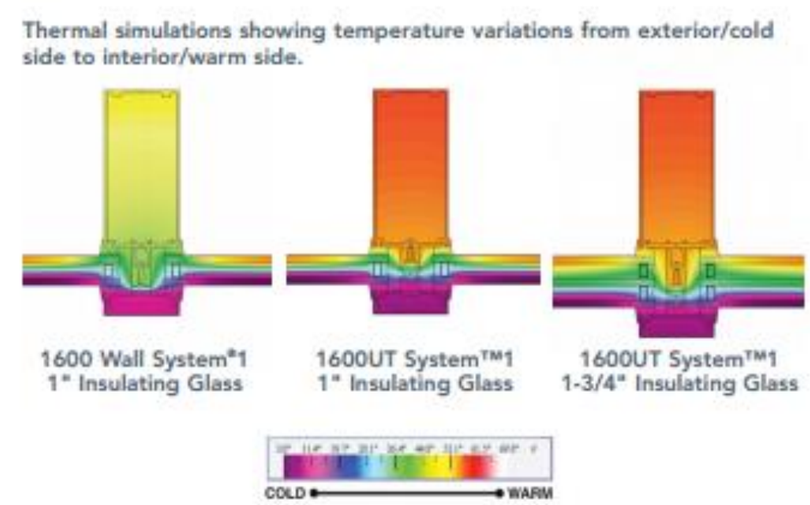

Thermal insulation performance

http://www.kawneer.com/kawneer/north_america/catalog/pdf/Curtain_wall/1600UT--F.pdf

Thermal Bridging

Content

.

What is thermal bridge?

A **thermal bridge**, also called a **cold bridge**, is a fundamental of heat transfer where a penetration of the insulation layer by a highly conductive or no insulating matarial.

Thermal bridging Curtain wall

The heat loss and gain that can occur at thermal bridges, condensation problems may also occur. One of the most prevalent locations for this risk is at fenestration interfaces with adjacent systems. Positioning of skylights, doors, windows, window walls, curtain walls, and other fenestration within the thickness of a wall or roof element.

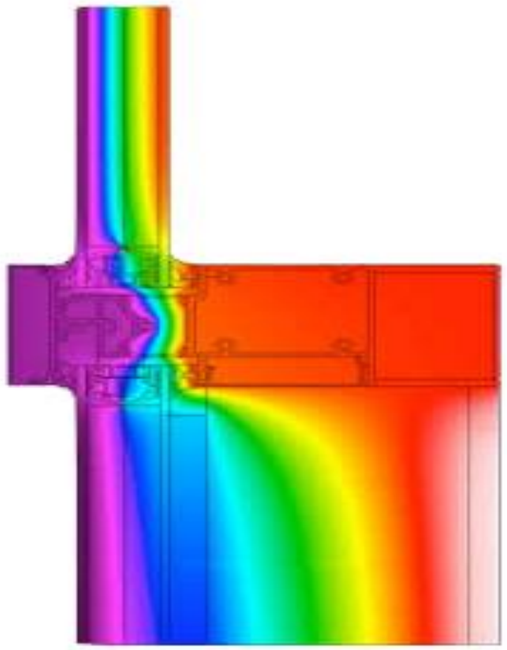

+ Advanced thermal modeling was used to predict thermal bridging through curtain wall.

http://en.wikipedia.org/wiki/Thermal_bridge

Curtain Wall R- value (thermal resistance)

Content

A good thermal break and high R-value (values as high as R-7 are possible with triple-glazed systems). Also, the use of low-e and spectrally selective glass coatings can significantly reduce energy loads and improve comfort close to the wall..

EX. KAWNEER MANIFUCTURE
1600 Wall System®3 is an inside / outside glazed captured curtain wall

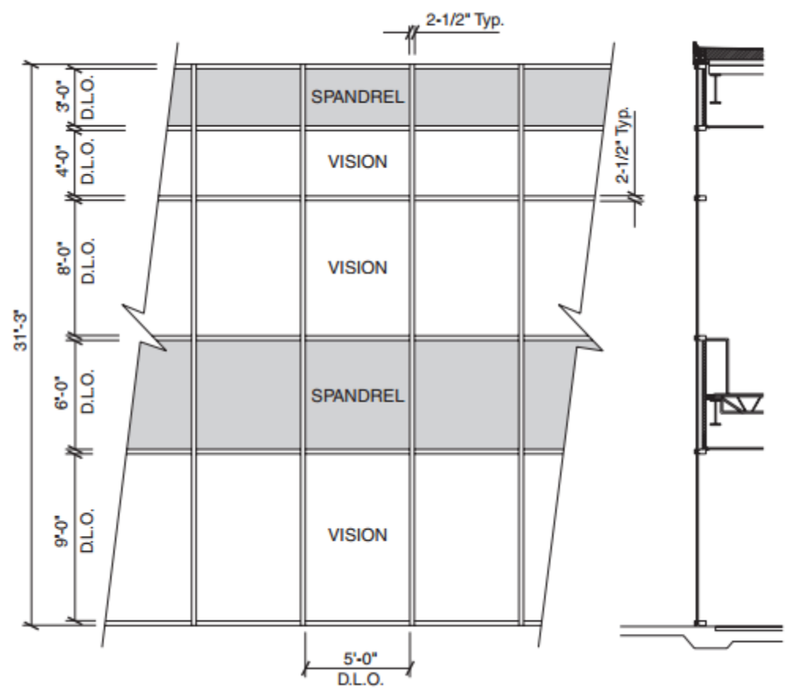

Vision Area

Example Glass U-factor	= 0.48 Btu/(ft^2 · h ·°F)
Vision Area	= 5(9 + 8 + 4) = 105.0 ft^2
Total Area (Vision)	= 5' 2-1/2"(9' 3-3/4"+ 8' 2-1/2" + 4' 2-1/2") = 113.2 ft
Percent of Vision Glass	= (Vision Area ÷ Total Area)100 = (105.0 ÷ 113.2)100 = 93%

Spandrel Area

Example Spandrel R-value	= 15 (ft^2 · h · °F)/Btu
Spandrel Area	= 5(6 + 3) = 45.0 ft^2
Total Area (Spandrel)	= 5' 2-1/2"(6' 2-1/2" + 3' 3-3/4") = 49.6 ft^2
Percent of Spandrel	= (Spandrel Area ÷ Total Area)100 = (45.0 ÷ 49.6)100 = 91%

http://www.alcoa.com/kawneer/north_america/catalog/pdf/1600_Wall_Sys3--A.pdf

Content

Glass Curtain Wall Chart

Manufacture : Kwaneer : 1600 wall system

ADVANTAGE	DISADVATAGE
Standard infill option are 1/8”	Curtain walls do not have any uniform characteristic
Integral vertical exterior cover and thermal barrier reduce installed cost Painted finishes in standard and custom choices	increase light pollution
does not require scaffolding	walls offer less insulation, which may mean higher heating and cooling bills.
Two color option	

http://www.alcoa.com/kawneer/north_america/catalog/pdf/1600_Wall_Sys3--A.pdf

Hearst Building, New York City, USA

Content

Glass Curtain Wall

- **Overview**

Research topics

- **Attachment Systems**
- **Air Barriers and Sealants**

Case study I

- **Rain Penetration and moisture control**
- **System joints and connections**

Case study II

- **Thermal Insulation and R values**
- **Systems Comparisons**

Metal Panel, rigid with Insulation

Research topics

- **Attachment System**
- **Air Barriers and Sealants**

Case study I

- **Rain Penetration and moisture control**
- **System joints and connections**

Case study II

- **Thermal Insulation and R values**
- **Systems Comparisons**

http://www.alcoa.com/kawneer/north_america/catalog/pdf/1600_Wall_Sys3--A.pdf

Hearst Building, New York City, USA

Content

OVERVIEW

• Hearst Tower in New York City, New York is located at 300 West 57th Street on Eighth Avenue, near Columbus Circle.
•. The tower – designed by the architect Norman Foster and constructed by Turner construction – is 46 stories tall, standing 182 m (597 ft) with 80,000 m² (856,000 ft²) of office space.
ADAVANTAGE/ STRENGTH

•The roof collects rainwater and, instead of directing it into the sewer system, uses it to water plants throughout the building and to replace moisture lost through air conditioning..

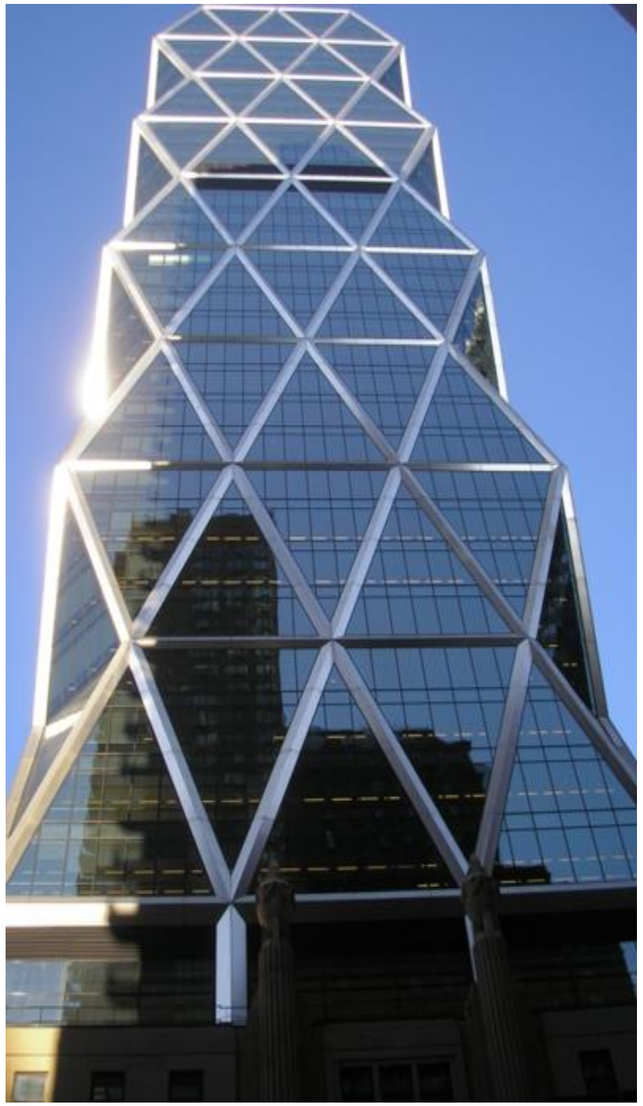

http://www.alcoa.com/kawneer/north_america/catalog/pdf/1600_Wall_Sys3--A.pdf

Hearst Building, New York City, USA

Content

Glass Curtain Wall

- **Overview**

Research topics

- **Attachment Systems**
- **Air Barriers and Sealants**

Case study I

- **Rain Penetration and moisture control**
- **System joints and connections**

Case study II

- **Thermal Insulation and R values**
- **Systems Comparisons**

Metal Panel, rigid with Insulation

Research topics

- **Attachment System**
- **Air Barriers and Sealants**

Case study I

- **Rain Penetration and moisture control**
- **System joints and connections**

Case study II

- **Thermal Insulation and R values**
- **Systems Comparisons**

http://www.alcoa.com/kawneer/north_america/catalog/pdf/1600_Wall_Sys3--A.pdf

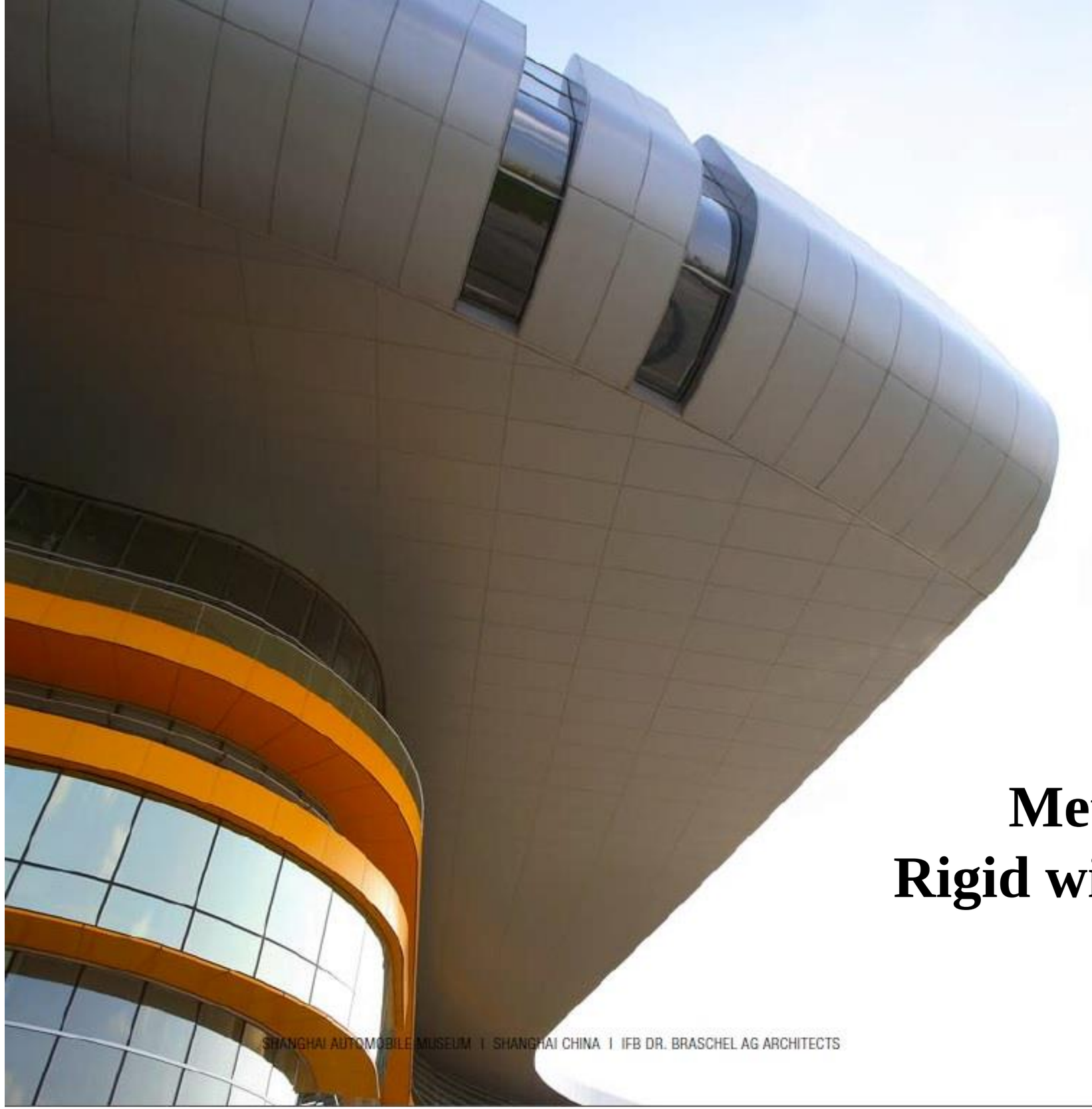

Metal Panel
Rigid with Insulation

Content

Glass Curtain Wall

- **Overview**

Research topics

- **Attachment Systems**
- **Air Barriers and Sealants**

Case study I

- **Rain Penetration and moisture control**
- **System joints and connections**

Case study II

- **Thermal Insulation and R values**
- **Systems Comparisons**

Metal Panel, rigid with Insulation

Research topics

- **Attachment System**
- **Air Barriers and Sealants**

Case study I

- **Rain Penetration and moisture control**
- **System joints and connections**

Case study II

- **Thermal Insulation and R values**
- **Systems Comparisons**

*Sys. Made of metal panels, each formed from sheet metal

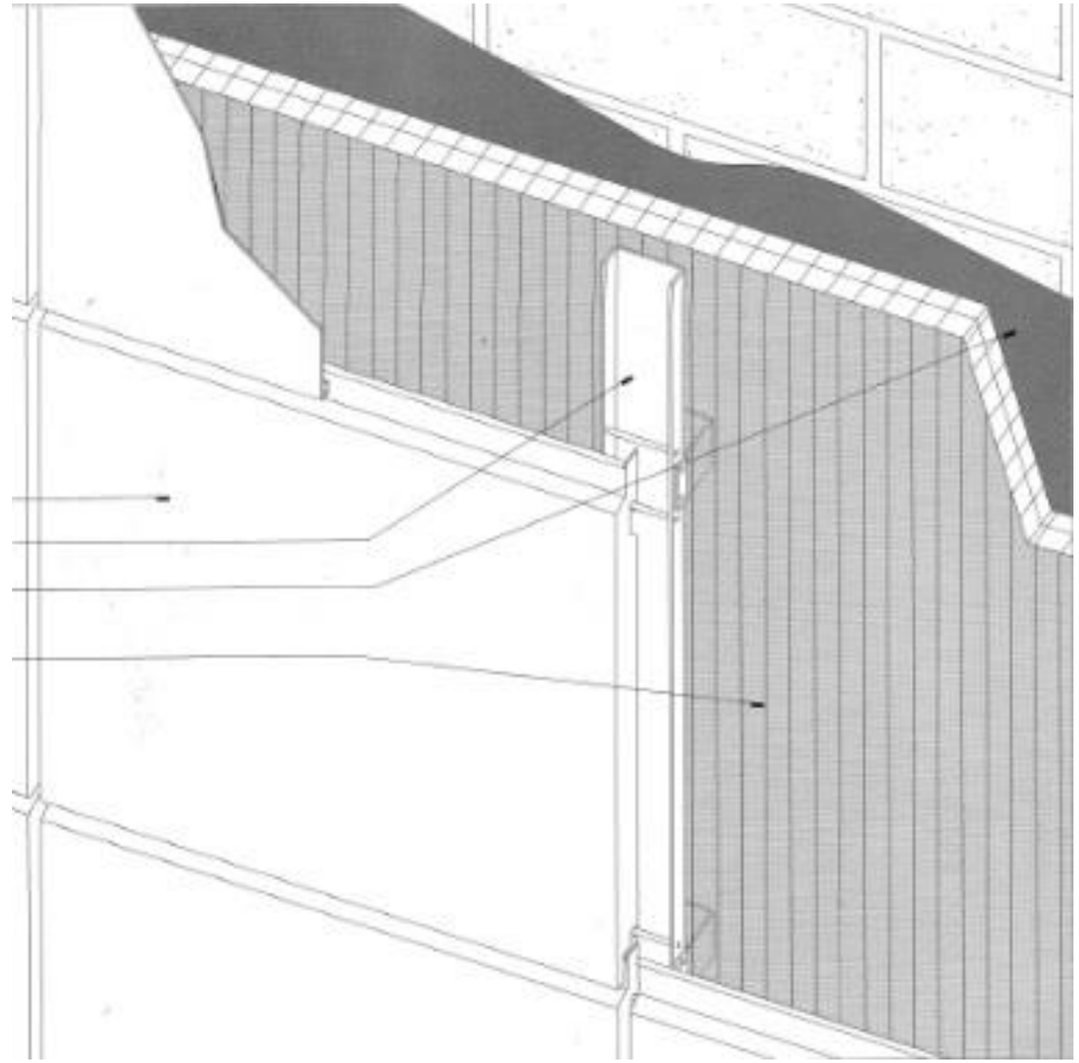

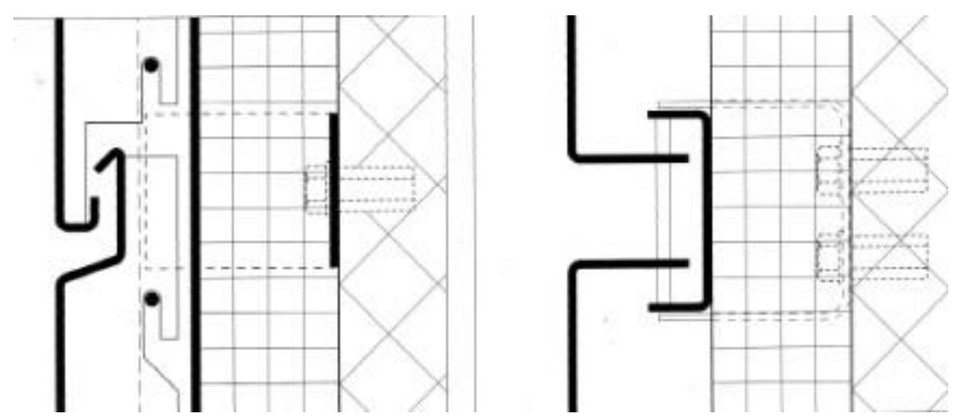

SECTION PLAN

Content

incorrect

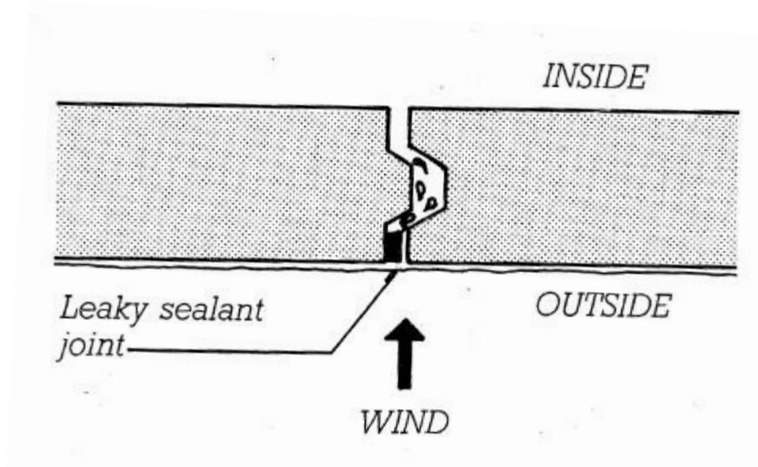

Sealant joint is at the outside face of the panels, where it is wetted during a storm

correct

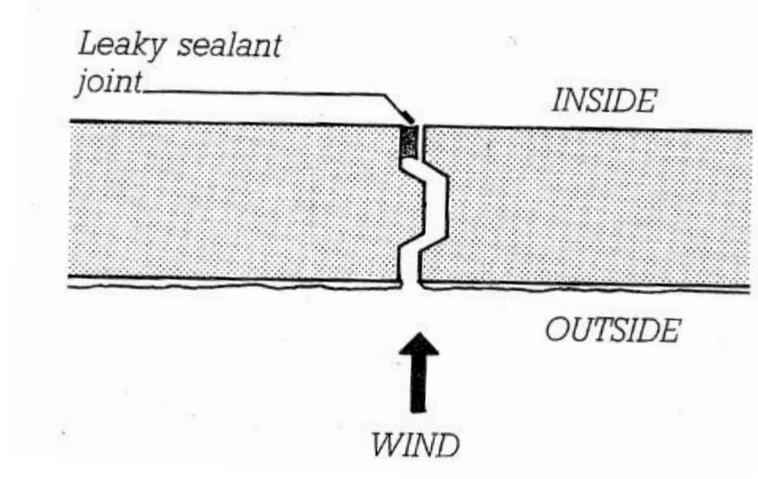

Sealant is located on the inside of the panels where it remains dry, air leakage through the joint is insufficient to transport water through the joint, and no water penetrates.

Fundamentals of Building Construction, Materials & Methods. Pg. 793

QuadroClad™
ALUMINUM RAINSCREEN SYSTEMS

Hunter Douglas Contract
http://www.hunterdouglascontract.com/home/index.jsp

Content

Glass Curtain Wall
- **Overview**

Research topics
- **Attachment Systems**
- **Air Barriers and Sealants**

Case study I
- **Rain Penetration and moisture control**
- **System joints and connections**

Case study II
- **Thermal Insulation and R values**
- **Systems Comparisons**

Metal Panel, rigid with Insulation

Research topics
- **Attachment System**
- **Air Barriers and Sealants**

Case study I
- **Rain Penetration and moisture control**
- **System joints and connections**

Case study II
- **Thermal Insulation and R values**
- **Systems Comparisons**

Toyo Ito & Associates

MAHLER 4 Block 5
Location: Amsterdam, Netherlands

Attachment Systems

Content

Glass Curtain Wall

- **Overview**

Research topics

- **Attachment Systems**
- **Air Barriers and Sealants**

Case study I

- **Rain Penetration and moisture control**
- **System joints and connections**

Case study II

- **Thermal Insulation and R values**
- **Systems Comparisons**

Metal Panel, rigid with Insulation

Research topics

- **Attachment System**
- **Air Barriers and Sealants**

Case study I

- **Rain Penetration and moisture control**
- **System joints and connections**

Case study II

- **Thermal Insulation and R values**
- **Systems Comparisons**

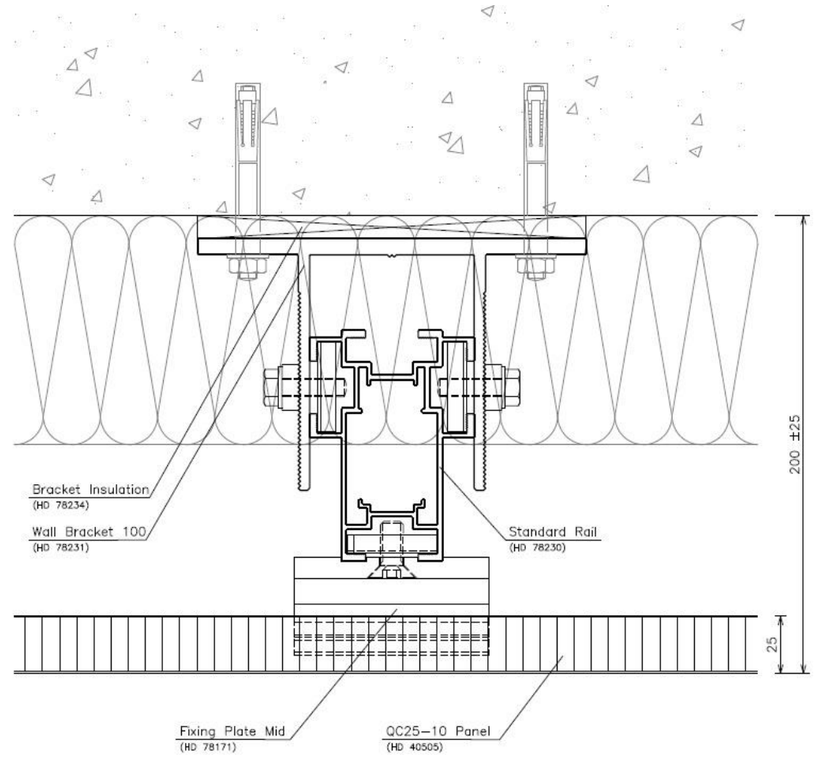

Plan

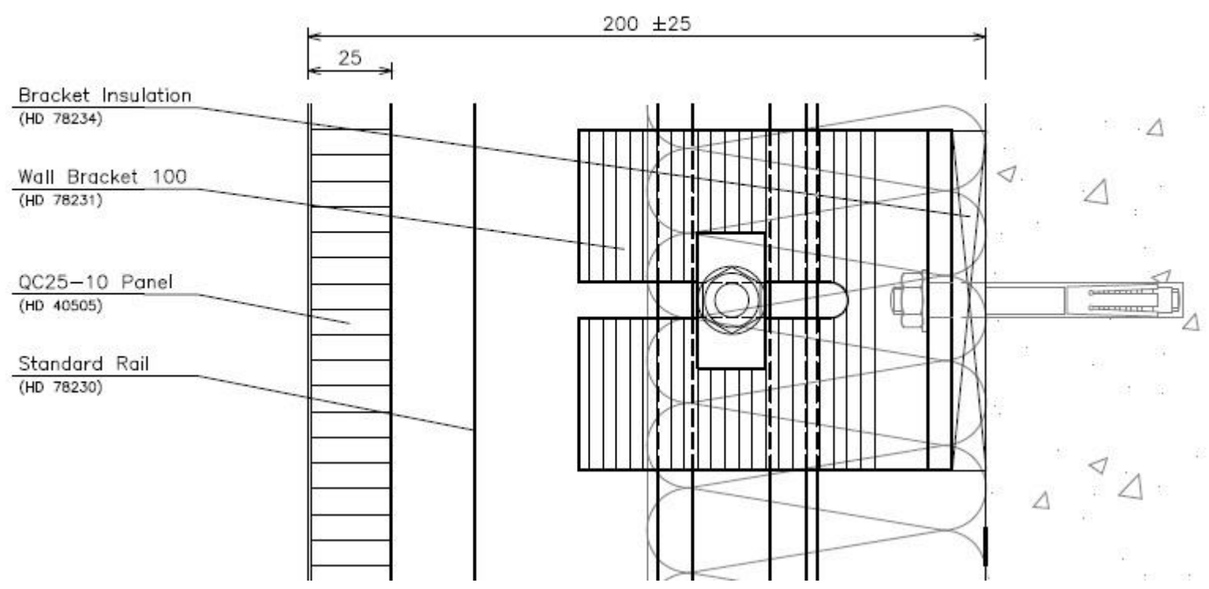

Section

http://www.hunterdouglascontract.com/facades/metal_facade.jsp

Content

Glass Curtain Wall

- **Overview**

Research topics

- **Attachment Systems**
- **Air Barriers and Sealants**

Case study I

- **Rain Penetration and moisture control**
- **System joints and connections**

Case study II

- **Thermal Insulation and R values**
- **Systems Comparisons**

Metal Panel, rigid with Insulation

Research topics

- **Attachment System**
- **Air Barriers and Sealants**

Case study I

- **Rain Penetration and moisture control**
- **System joints and connections**

Case study II

- **Thermal Insulation and R values**
- **Systems Comparisons**

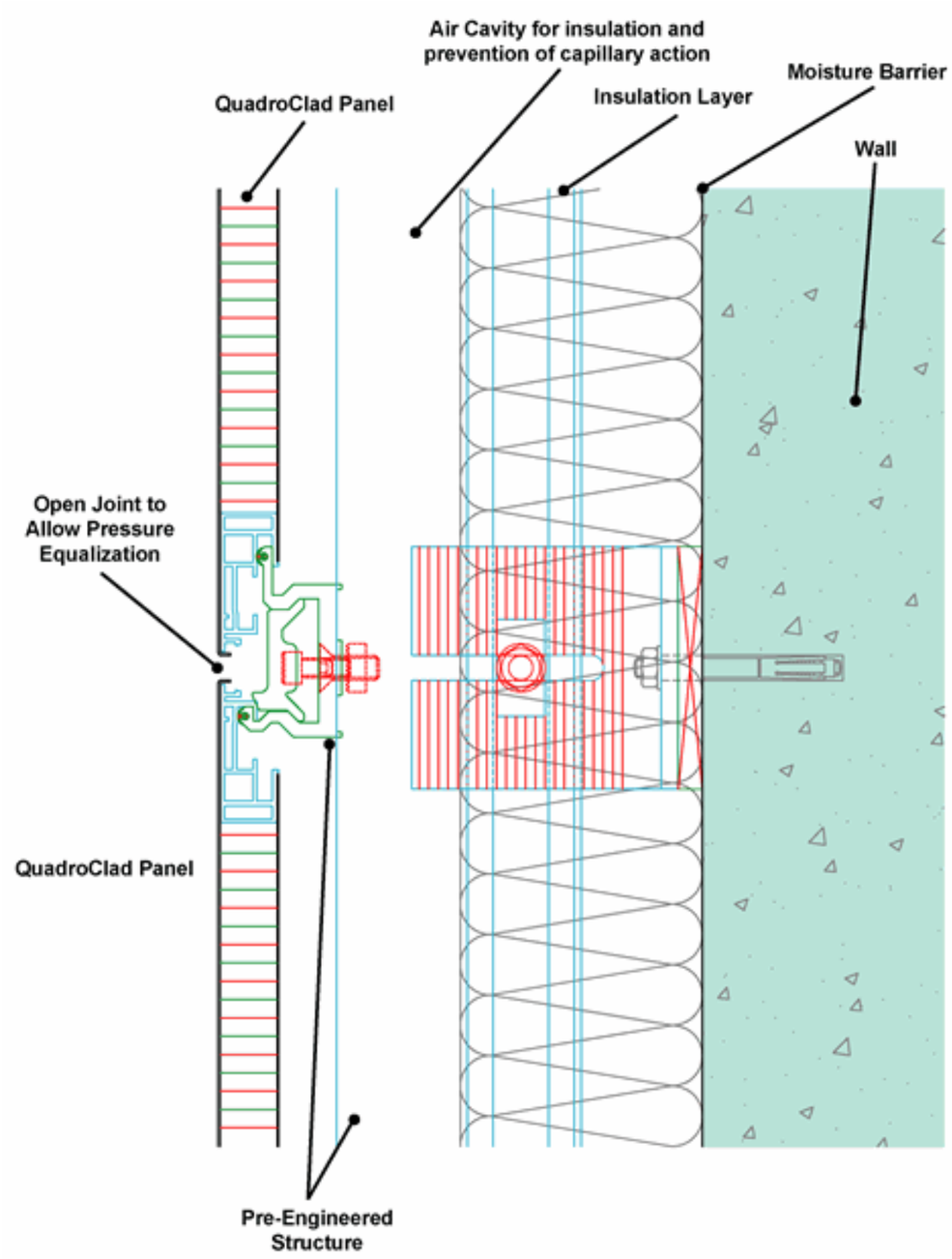

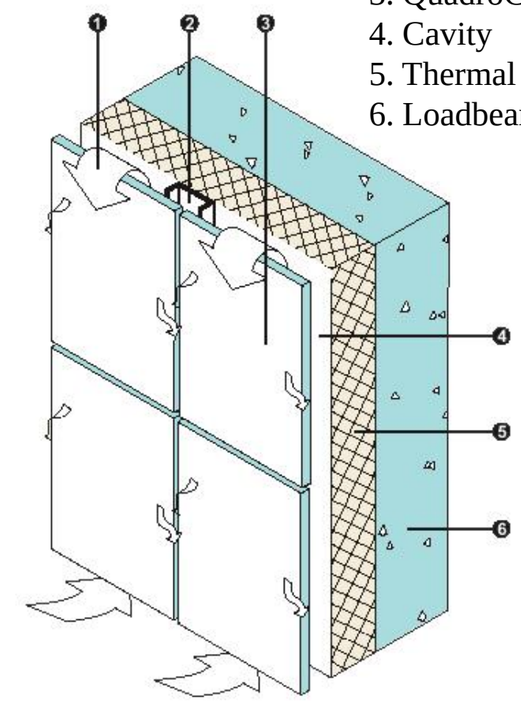

1. Ventilation
2. Drainage Channel
3. QuadroClad Pannel
4. Cavity
5. Thermal Insulation
6. Loadbearing Wall

Open-joint rainscreen façade systems control rain penetration, maintain ventilation, and provide thermal insulation.

http://assets.hunterdouglascontract.com/documents/facades/facades_brochure.pdf

Content

What is insulated metal panel?

Insulated metal panels are rigid foam sandwiched between two sheets of coated metal. They are molded in a variety of styles and sizes depending on application.

Advantages

- Insulated metal panels allow for quick and easy installation
- insulated metal panels often require fewer structural supports because of their enhanced spanning and load bearing capabilities
- Metal roof and wall panels require minimal maintenance and last 40 years or more.
- Insulated metal panels are wind, water, fire, hail, insect and rodent resistant. They also perform well in seismic areas.

Normally used in industrial buildings such as:

- Airport Hangars
- Churches
- Bank buildings
- Manufacturing buildings
- Offices
- Sports facilities
- Schools

The most common used substrates for insulated metal panels are G90 Galvanized steel, AZ 50 aluminum-zinc coated (a792) steel and aluminum for both interior and exterior faces.

Content

Metal panel with insulation

Water Penetrations

The testing methods used is: ASTM E 331 and ASTM E 1646

- Insulated metal panels offer a complete hidden fastener system that typically includes the vapor barrier, air barrier and water barrier along with a high efficiency insulation system.

- A complete panel assembly mounted vertically containing panel side joints should be tested in accordance with ASTM E 331 with no uncontrolled water leakage at a minimum of 6.24 psf air pressure differential for wall panel assemblies and in accordance with ASTM E 1646 with no uncontrolled water leakage through the panel joints at a static pressure of 12 psf for roof panel assemblies.

The ASTM E 331 testing is performed by applying water to the exterior of the test specimen while lowering the pressure inside by means of an air chamber built on the inside or opposite side of the test specimen

http://www.youtube.com/watch?v=n5dL9M18ZnQ

Content

Glass Curtain Wall

- **Overview**

Research topics

- **Attachment Systems**
- **Air Barriers and Sealants**

Case study I

- **Rain Penetration and moisture control**
- **System joints and connections**

Case study II

- **Thermal Insulation and R values**
- **Systems Comparisons**

Metal Panel, rigid with Insulation

Research topics

- **Attachment System**
- **Air Barriers and Sealants**

Case study I

- **Rain Penetration and moisture control**
- **System joints and connections**

Case study II

- **Thermal Insulation and R values**
- **Systems Comparisons**

Metal panel with insulation

Water Penetrations

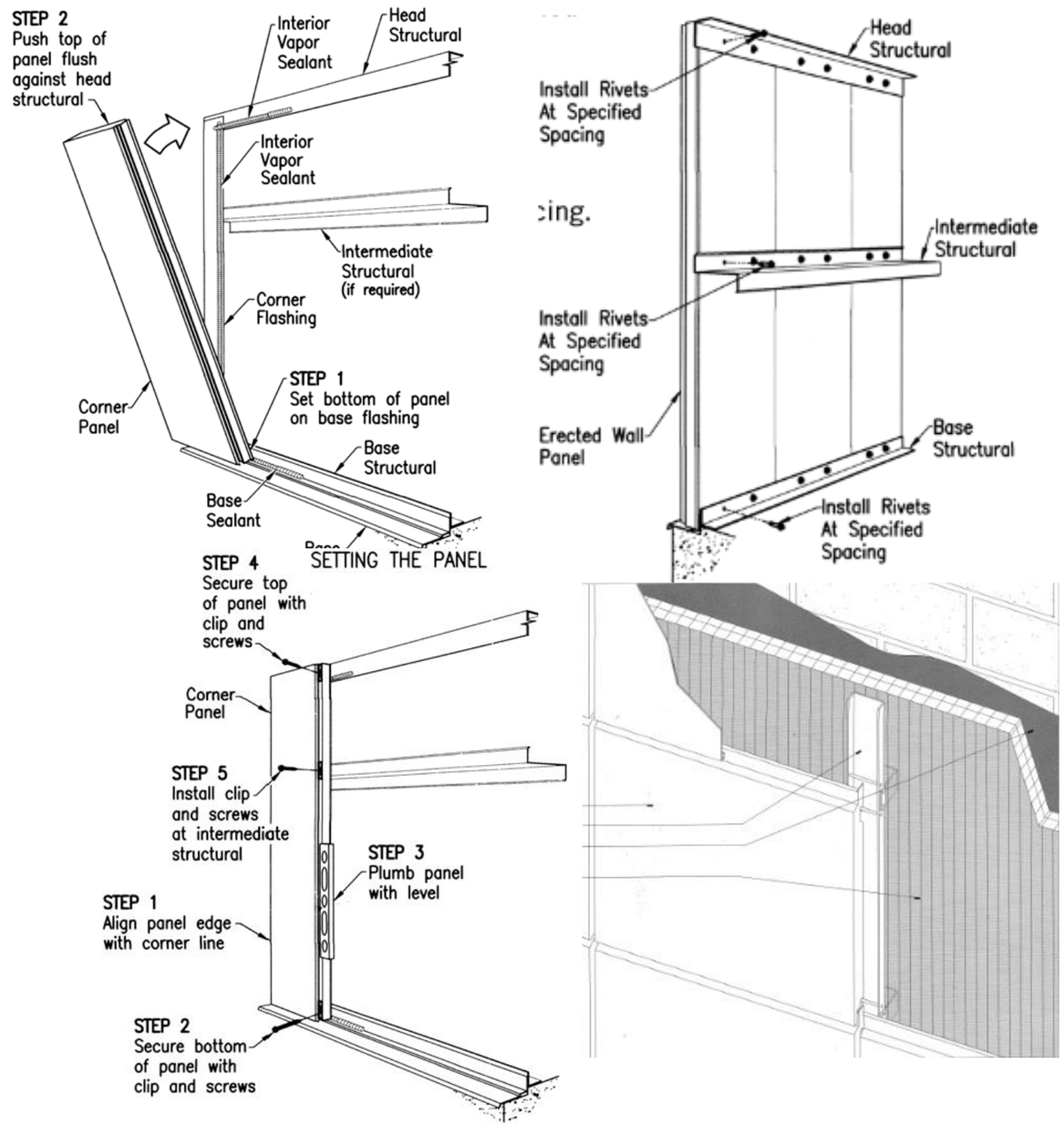

Thermal Bridging

Content

The high thermal conductivity means that steel construction systems, both the structural frame and cladding, must be carefully designed to minimize unwanted heat flows. For example, built up cladding and composite (sandwich) cladding panels with steel skins are designed to keep thermal bridging to a minimum by ensuring that steel elements are not continuous through the cladding e.g. for a built up cladding system as shown in the figure below a thermal break is provided beneath the bracket in the spacer system.

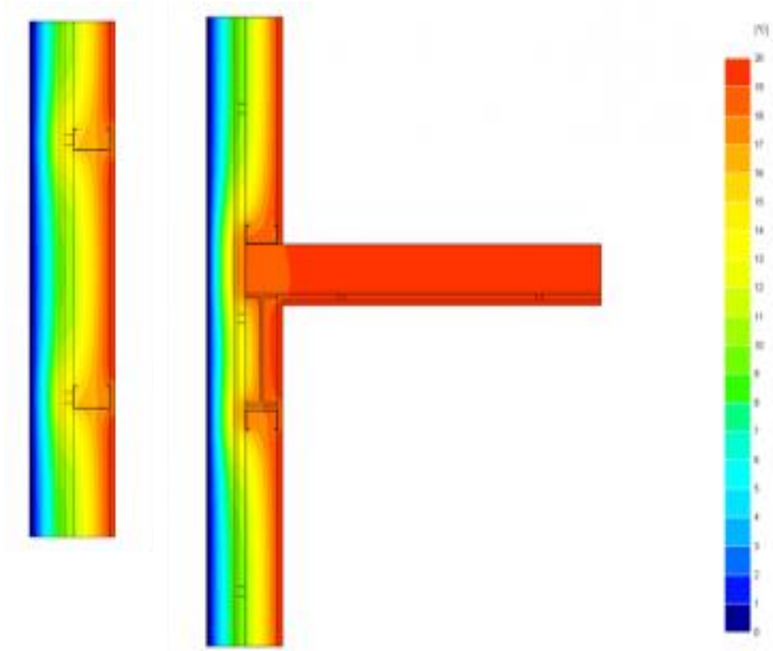

http://www.todaysfacilitymanager.com/pdfs/MBCI_IMP_White_Paper.pdf

R- value (thermal resistance)

Content

How to find the R- value?

The thicker it is, the greater the R-value. For example, for a particular type of insulation board, a 2-inch-thick board will have twice the R-value of the 1-inch-thick board.

Equation 2: R-value = 1 / C-value

If the C-value is 0.5, then the R-value is 2.0. One can calculate it from the equation for C-value in Equation 1 above:

Equation 3: R-value = thickness / K-value

Thus, if the thickness is 1 inch, and the K-value is 0.25, then the R-value is 1 divided by 0.25

Product Specification

Panel Thickness	2" 2-1/2" 3" 4"
R-Value	7.5 per inch
Panel Width	24" 30" 36" 40"
Lengths	6'-0" to 20'-0"
Joint Configuration	Double tongue and groove interlocking rainscreen joint
Reveals	1/8" vertical application, 3/8" horizontal application, optional 1" to 6" horizontal application
Exterior Face	22 Ga. smooth profiled G-90 galvanized or Galvalume® prepainted steel
Interior Face	26 Ga. Shadowline profiled G-90 galvanized or Galvalume® pre-painted steel
Orientation	Horizontal or Vertical
Product Code	KS36OPS

Content

Metal panel, ridge with insulation Chart

Manufacture : MBCI's eco-FICIENT®

ADVANTAGE	DISADVATAGE
Insulated metal panels allow for quick and easy installation	Bad insulation
reduced labor costs and earlier building occupancy and business starts	Thermal bridging could be a problem
Panels are available in widths up to 42" and lengths up to 50', resulting in high installation efficiencies.	Potential Moisture **Problems**
insulated metal panels have an R-value of up to 7.69 per inch of insulation thickness	