# THIN SHELL STRUCTURES

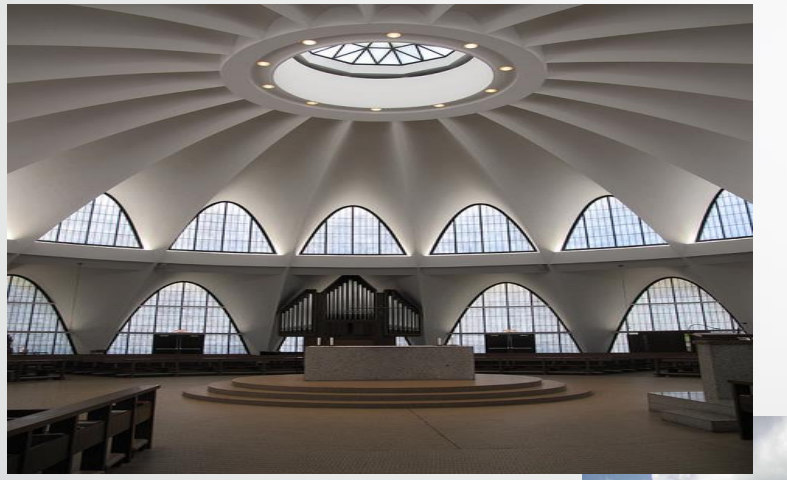

ARCH 2430

Professor Aptekar

Farhana Rahman

Jonathan Ramirez

Michael DiCarlo

Renee Fayzimatova

# Thin Shell Structure

System spans and effective spans

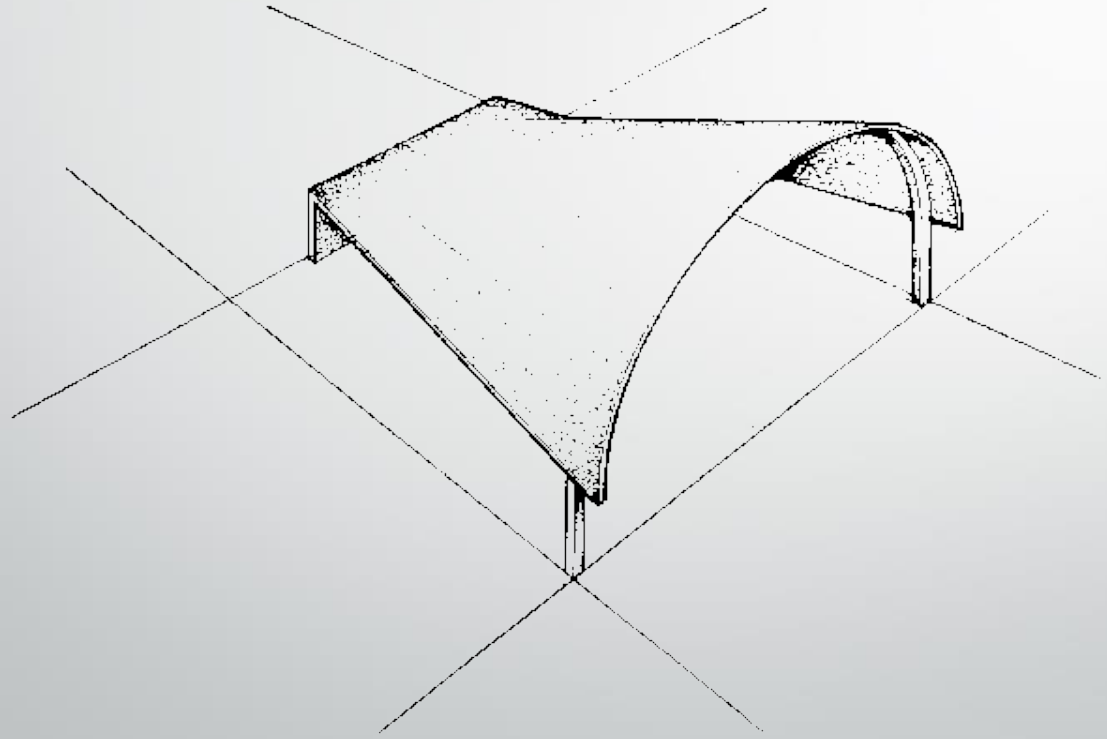

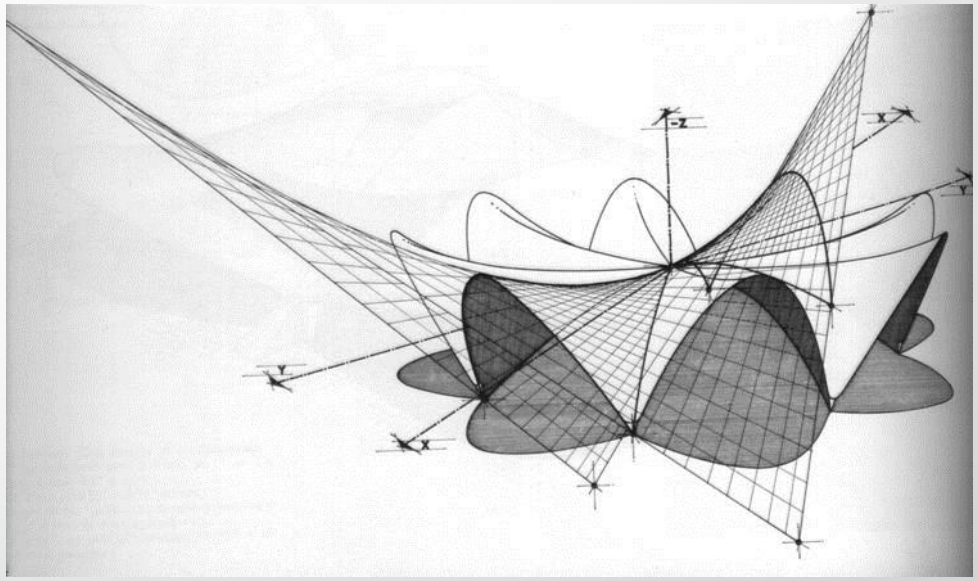

# System spans and effective spans

- Span is the distance between two intermediate supports for a structure.
- Thin shell Structure which could be flat but in many cases is dome take the form of ellipsoids or cylindrical sections, or some combination thereof
- Spans distance in a thin shell structure is in between 40 – 300 and much larger.

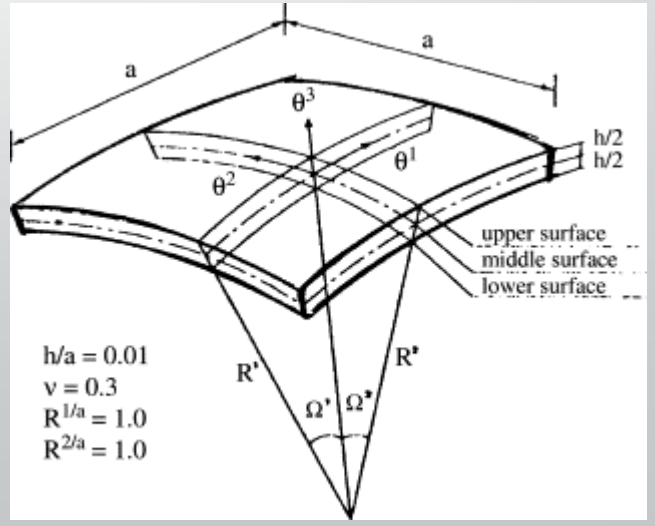

# System spans and effective spans

- The curve of the wall help the structure stay in place without column and buttresses.

- Spans in regular flat spans you would use beam and columns in Thin shell Structure would be different.

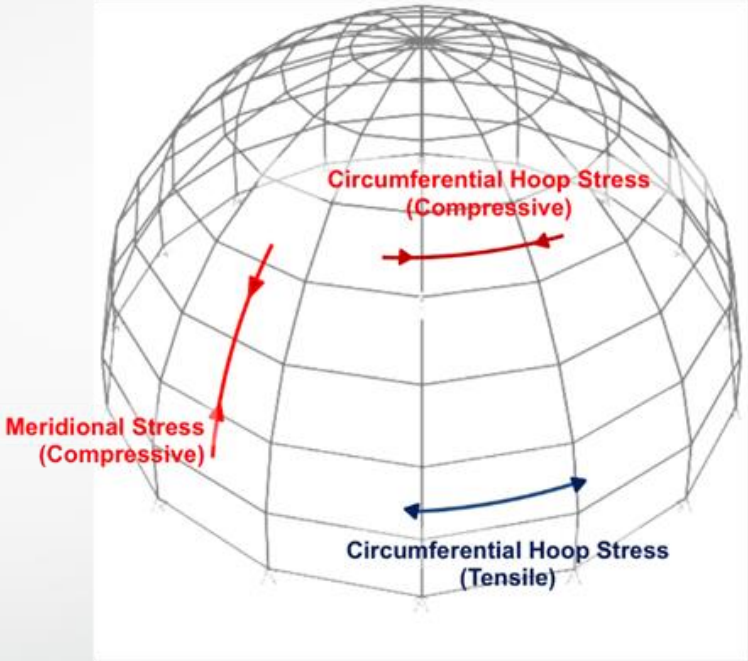


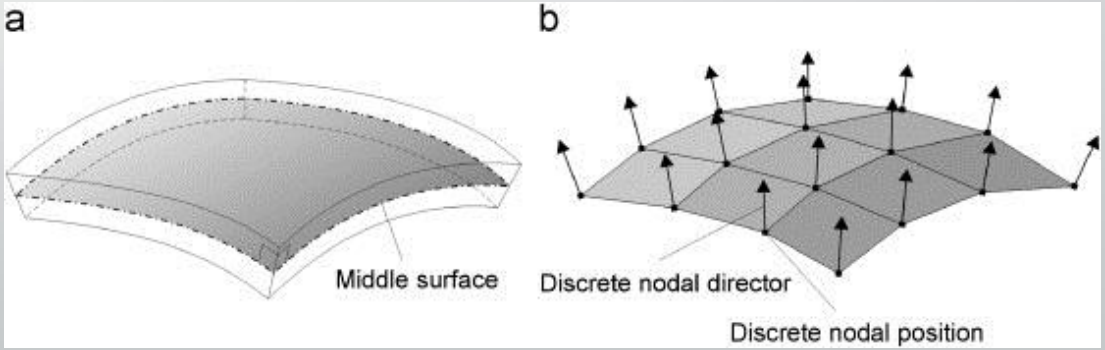

# Thin Shell Structure

Construction time and cost

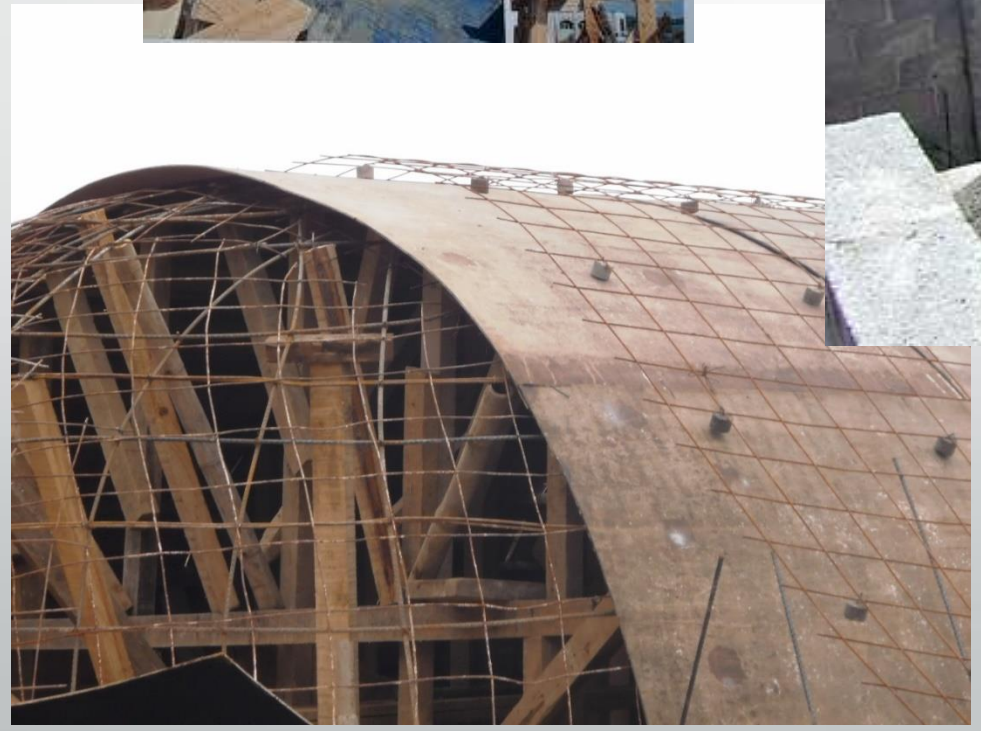

# Construction time and cost

- The construction of a reinforced concrete shell involves many problems, the design and construction of forms, reinforcement selection and placing, concrete materials and placing, and curing and decentering.

- When building with concrete its very time consuming meaning  curing of concrete takes long and its cost labor work is more.

# Construction time and cost

- Cost of the material is very low.
- In construction of a large span is better to do with concrete.
- Thin shell was great when is started then it slow down because of time it consume. Concrete thin shell is coming back.

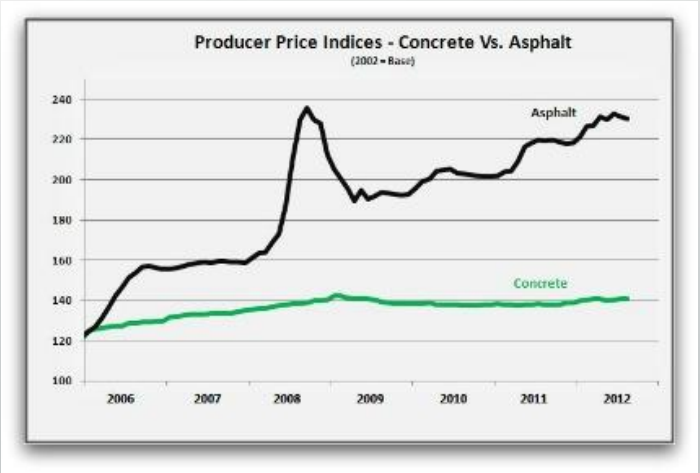

# Palau de les Arts Reina Sofia

- The building rises 14 stories above ground and includes three stories below ground, and height is 75 metres (246 ft), being the tallest opera house in the world.[5] Under the expansive curved-roof structure, 230 m (755 ft) in length, the 40,000 m2 (431,000 sq ft) building contains four auditoriums:

is an opera house and cultural centre in Valencia, Spain. It opened on 8 October 2005

# *Thin concrete shell details and connections*

*Shawnessy Light Rail Transit (LRT) Station in Calgary, Alberta, Canada*

# Material specs.

- *"Twenty-four unique, thin-shelled precast concrete canopies measuring 5 × 6 m (16 × 20 ft) and just 20 mm (3⁄4 in.) thick, sup- ported on single columns, provide… shelter for commuters."*
- *"…ultra-high performance fiber reinforced concrete (UHPFRC) materials that offer… superior technical characteristics including ductility, strength, and durability without using mild reinforcing steel,… highly moldable products with an excellent surface quality."*

# Design objective

- Originally intended as a steel canopy
- The design's prime objective was to provide commuters with weather protection, as well as give the station an aesthetic "make-over" for the sake of the local residencies

# Assembly

- *"On site, the canopies were lifted onto temporary supports… Once the canopies were installed on each platform, the struts were lifted into position using the assembly frame as support for the chain hoist. The struts were connected to the canopies and columns with stainless steel connec- tions. Attachment was accomplished through pinning and welding the struts to the columns and to the underside of the canopies"*
- Three shells are attached with thermal expansion breaks between each group of three

# Pre-casting

- *"The canopy forms were made of plate steel. A three-dimensional model of the casting and form was generated by a computer model."*
- *"It was determined that the form would have to rotate after casting to orientate the product with the curve down, al- lowing unrestrained shrinkage to occur while at the same time supporting the casting."*



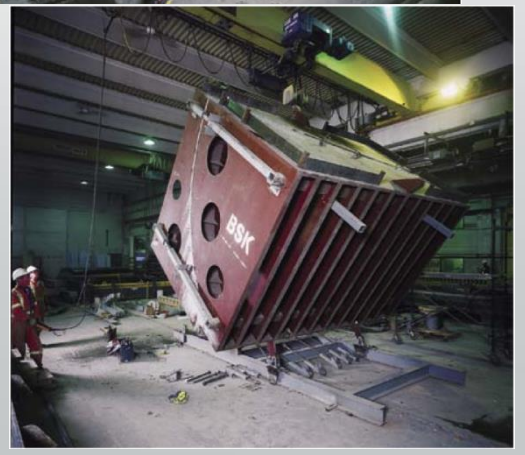


# Foundation and support

- Right: "*Three-legged assembly cross on each column provided an anchor for hoisting the struts into place.*"
- Left: Columns on the southbound platform

# Versatility in form

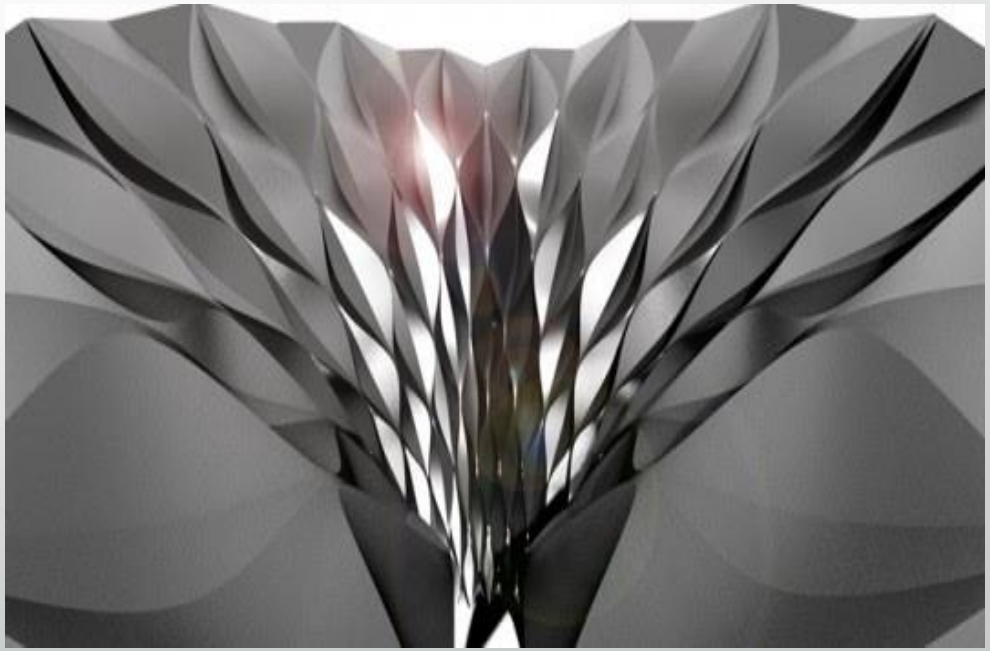

# Versatility in form

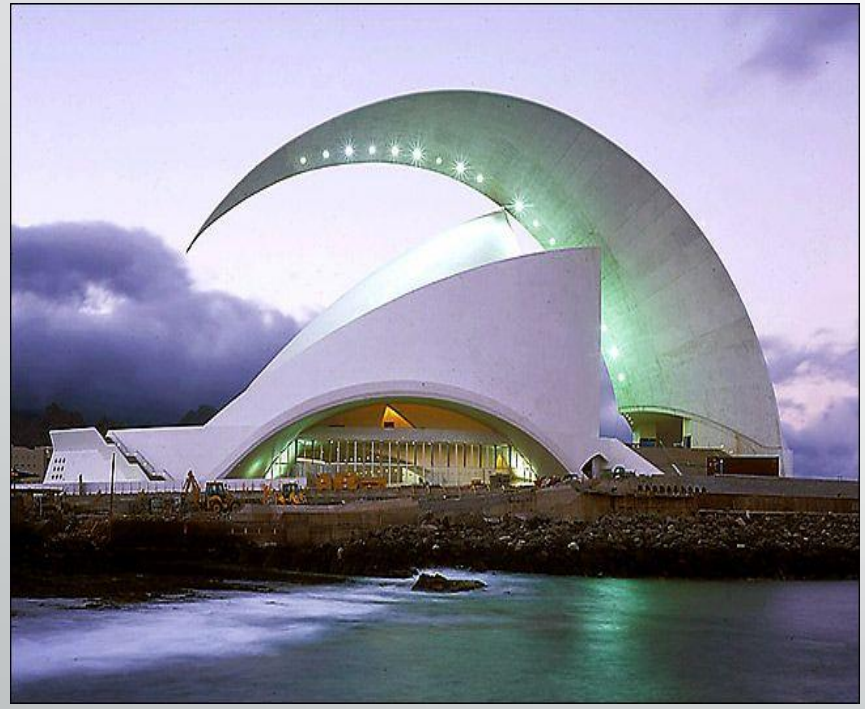

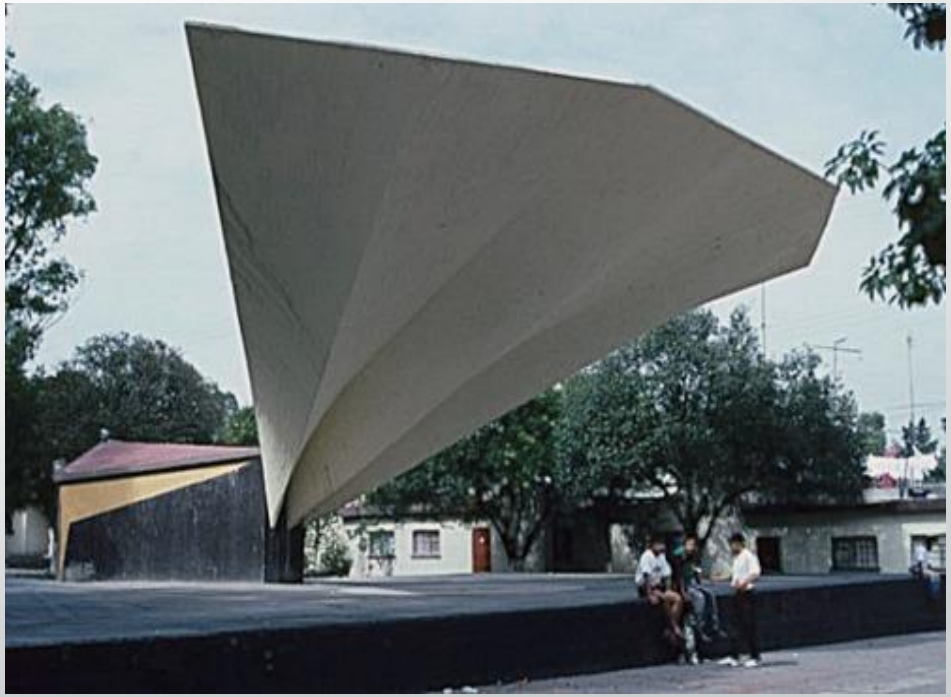

# Versatility in form

While air form thin-shell concrete construction is versatile and varied, it is limited to shapes that can be inflated. There seem to be no limits on the designs.

# *Thin concrete shell form versatility*

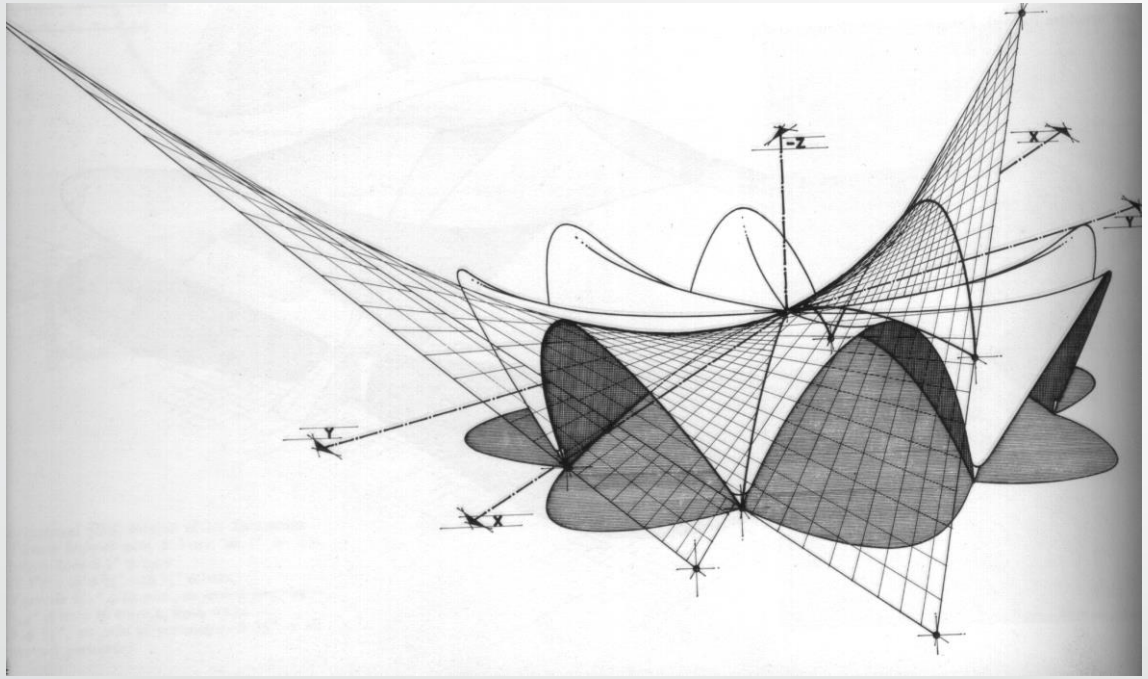


Oceanographica, Valencia, Spain

Felix Candela

# Versatility in form

# The site/ project

- Marine park
- Largest in Europe
- Over 1,000,000 sq ft surface
- Over 11,000,000 gal capacity
- Valencia,Spain

# The shell structure

- The structural strength is derived from the hyperbolic shape which evenly distributes and directs loads downward all in a compressive manner

# Structure and form

- 6 cm thick concrete shell
- 40 meter span
- Steel fiber reinforced

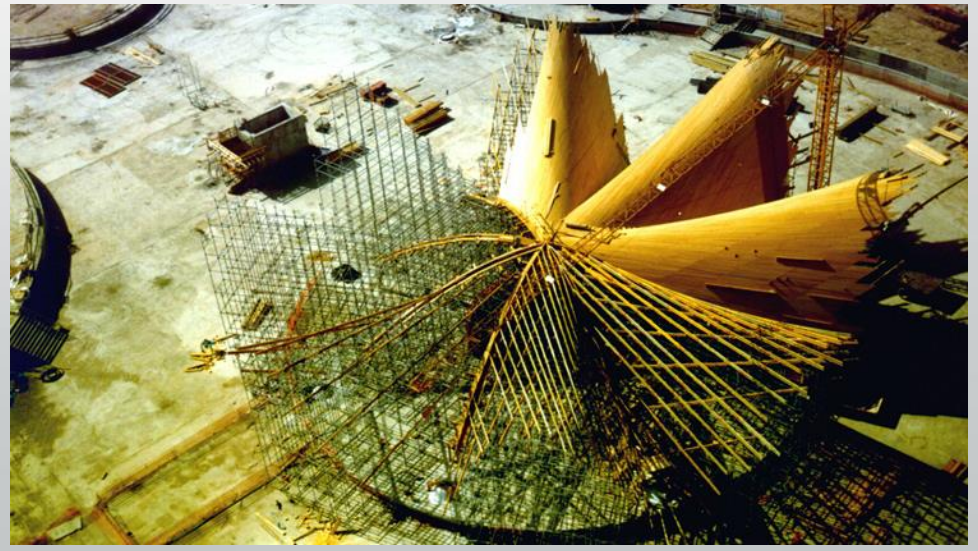

# Form

- The time of form scaffolding require to build this type of design
- Work intensive
- Built “twice”

# The site /Project

- Chapel Lomas De Cuernavaca
- Less then 2 inches concrete shell
- Built in 1958
- Height of 21 meters (70 feet)
- Architects Guillermo Rosell and Manuel Larrosa

# The Shell Structure

- The geometric shape hyperbolic paraboloid ('hyper') was utilized in this project.

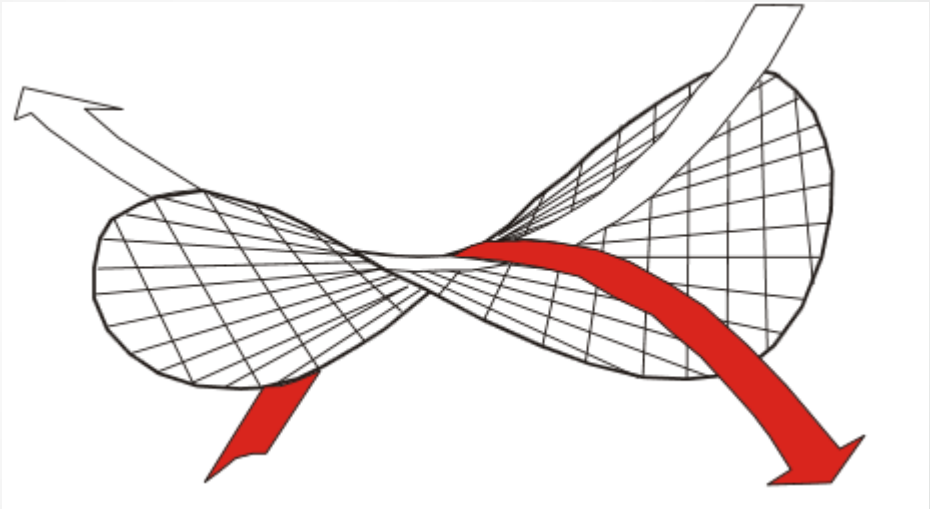

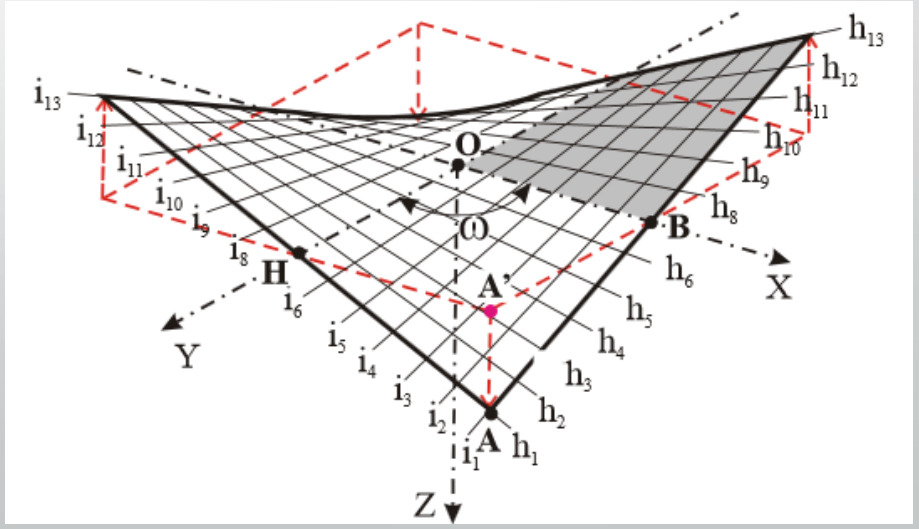

# Structure and Form

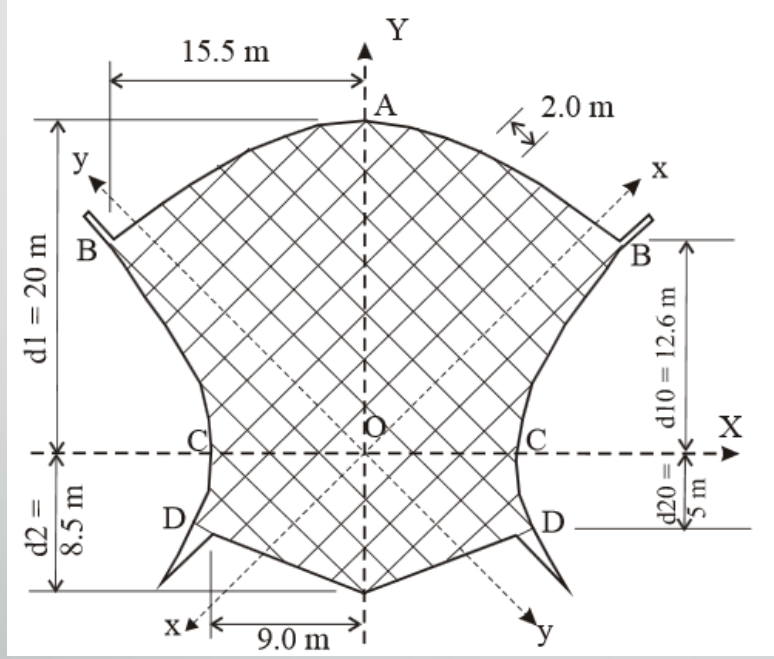


Plan

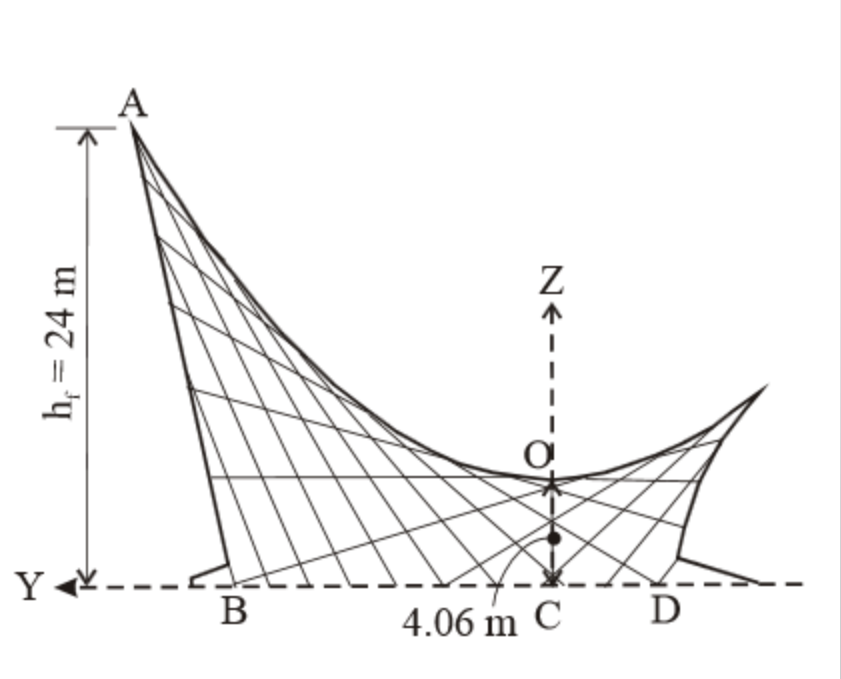


Elevation

# Details

- Above: Dimensions and section elevations of front and back views of precast concrete canopy and support strut.
- Below: Elevation and dimensions of side view of precast concrete canopy structure.
- *"A single, slender column supports each shell and serves as a conduit for communication, security, and electrical cabling."*

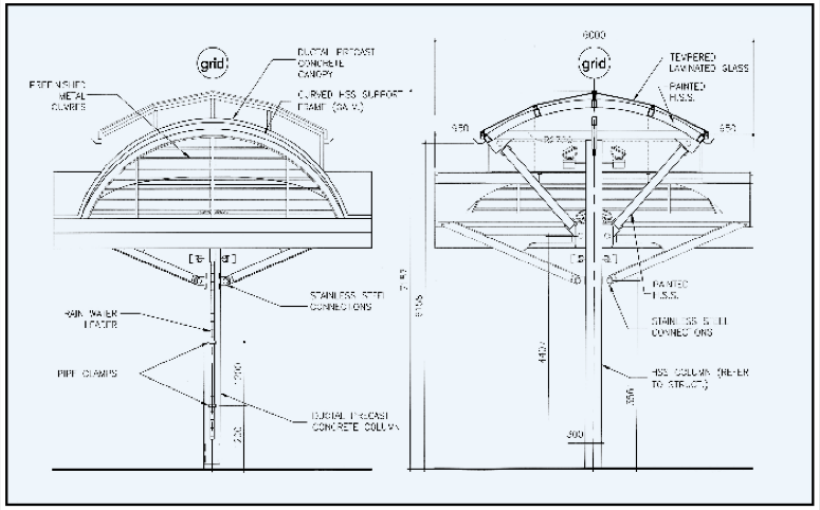


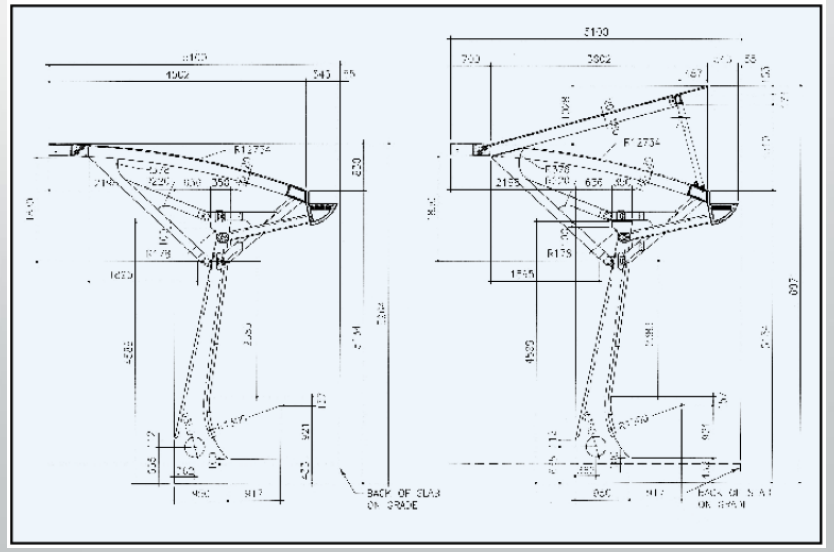

# Details in repetition

Repetition of forms and connection makes for more efficient assemblies

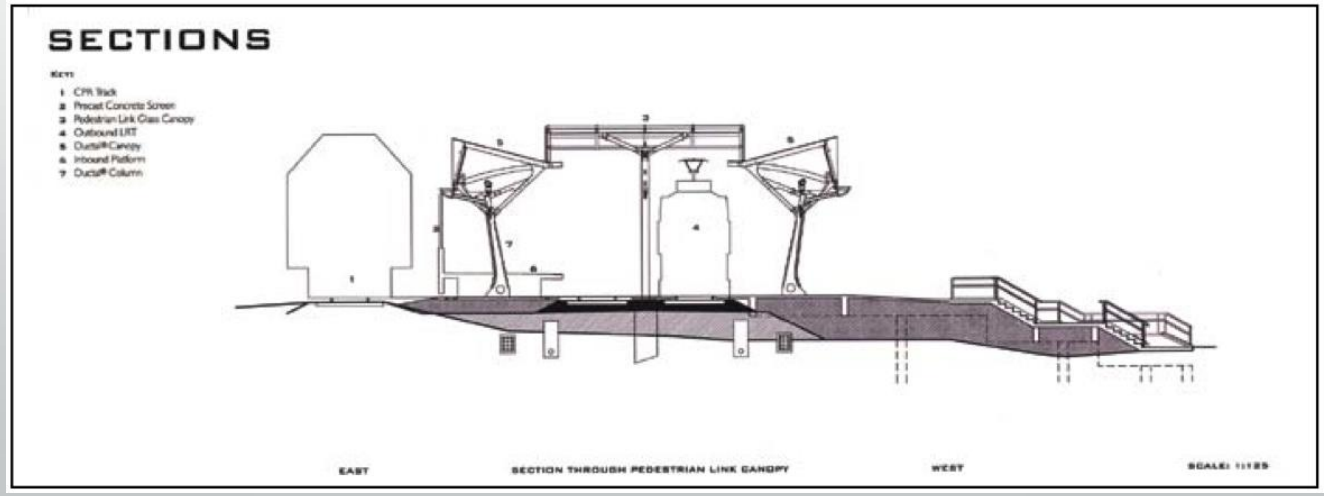

# Details

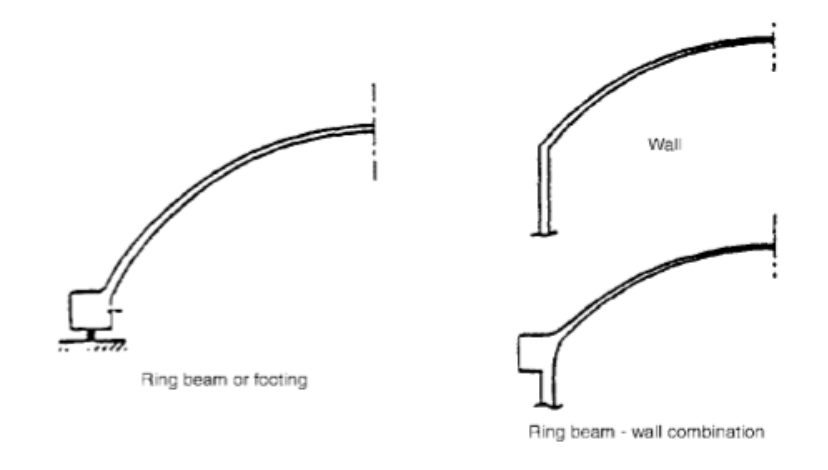
Wall
Ring beam or footing
Ring beam - wall combination

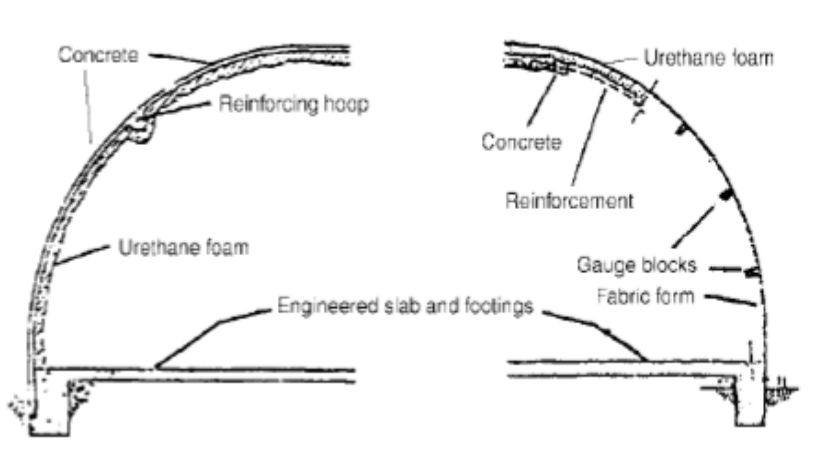
Concrete
Reinforcing hoop
Urethane foam
Urethane foam
Concrete
Reinforcement
Gauge blocks
Fabric form
Engineered slab and footings

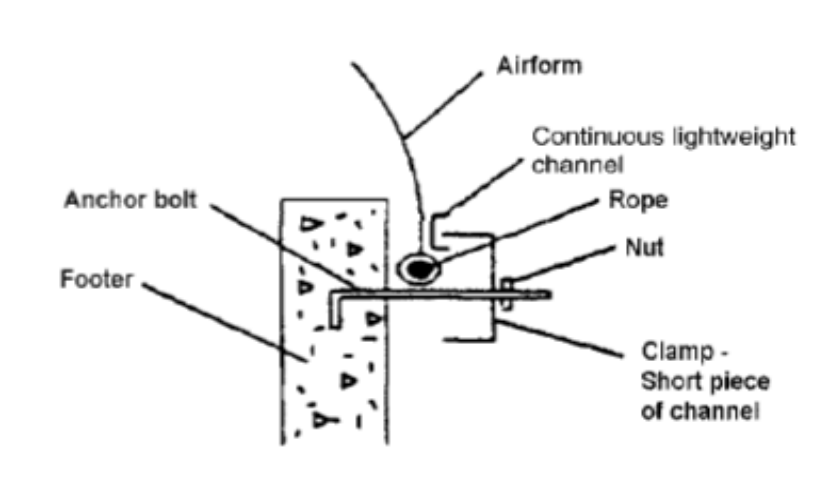
Airform
Continuous lightweight channel
Anchor bolt
Rope
Nut
Footer
Clamp - Short piece of channel

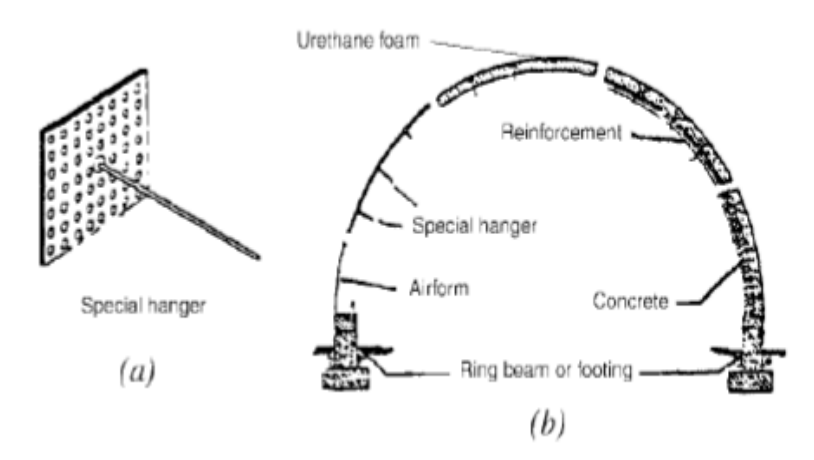
Urethane foam
Reinforcement
Special hanger
Airform
Concrete
Ring beam or footing
Special hanger
(a)
(b)

# Details

*"Eye of the Storm," Sullivan's Island, S.C.: prolate ellipse residence—80 ft. (24.4 m) long, 57 ft. (17.4 m) wide, and 34 ft. (10.4 m) tall.*

A concrete dome is nearly invulnerable to tornadoes, earthquakes, hurricanes, and other natural disasters.

# TWA FLIGHT CENTER (Trans World Airlines)

by Eero Suarinen

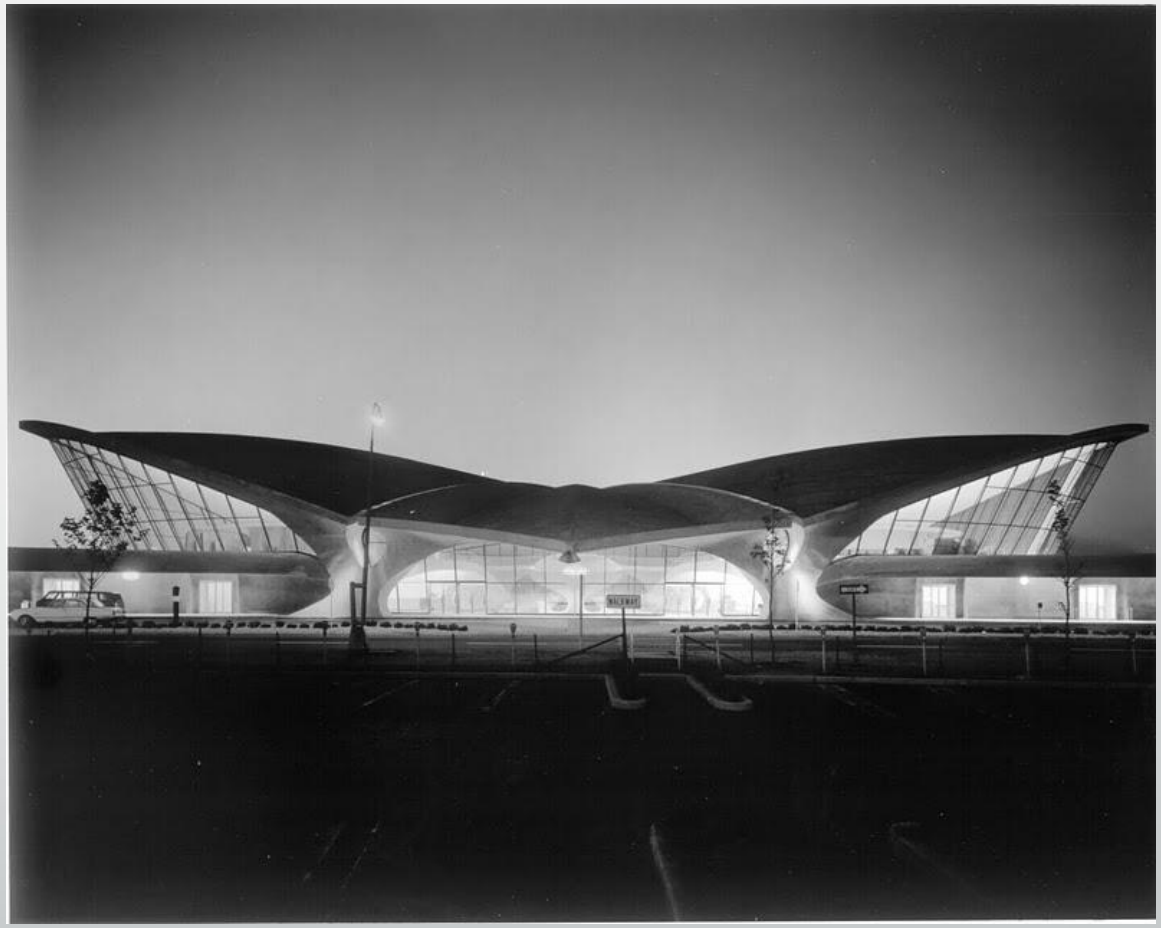

# The site/ project

- It is in New York City
- It was built in 1962
- Style is Modern Movement, Expressionistic
- Structure type- thin shell structures
- It is made of reinforcement concrete
- Thin shell structure are mostly concrete flat plate slab

# Inspiration

- The design of this terminal was inspired by a gothic vault to a house without column that he saw.

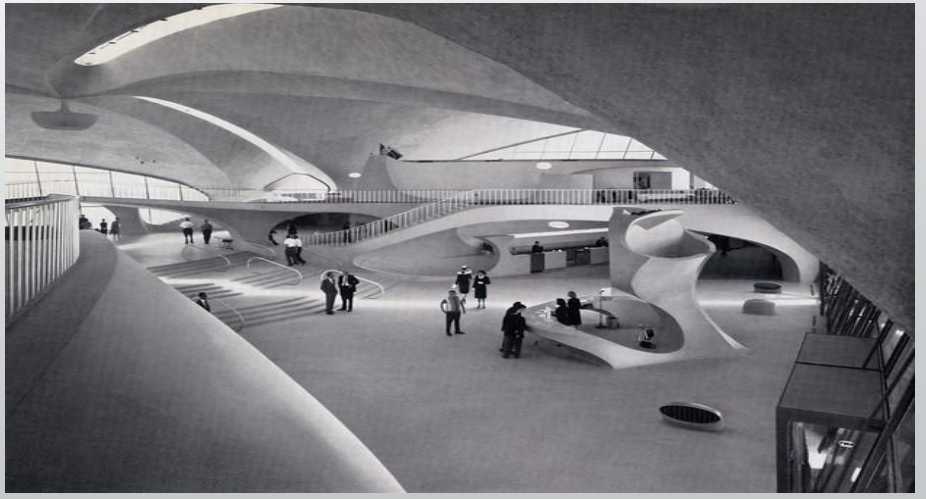

# Details

- This building consists of several free form curves and it's interior curve makes offers an interesting and dramatic space.
- As a structural support, the designer used these free form curves as the support element for vertical loads.
- Since it didn't had that generic columns to support the building's load, it was easier to build a curved interior space.
- The unique interior space provides an open space to the visitors.
- Due to the building complex structure which included curved elements, the use of concrete as the structural system was a great choice.

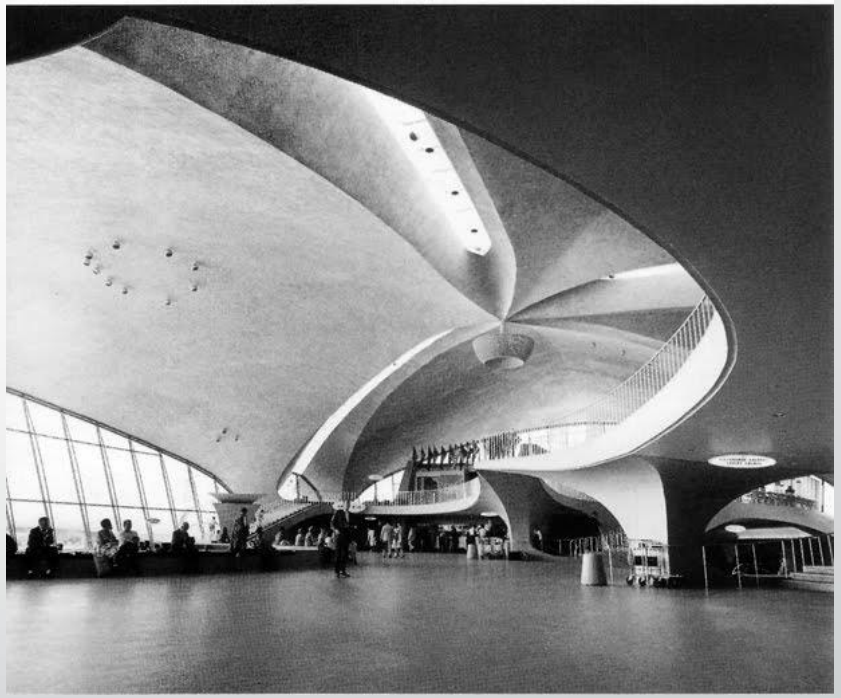

# Details

- This building might look like a free form sculpture piece of concrete but it has reinforced (steel) inside it that support the roof.
- It has a Y shape column but it not a typical column we see which is round or square. It uses the curve shape and the concept of a column, and combine it to make a Y shape column that blends in with the interiors pace.

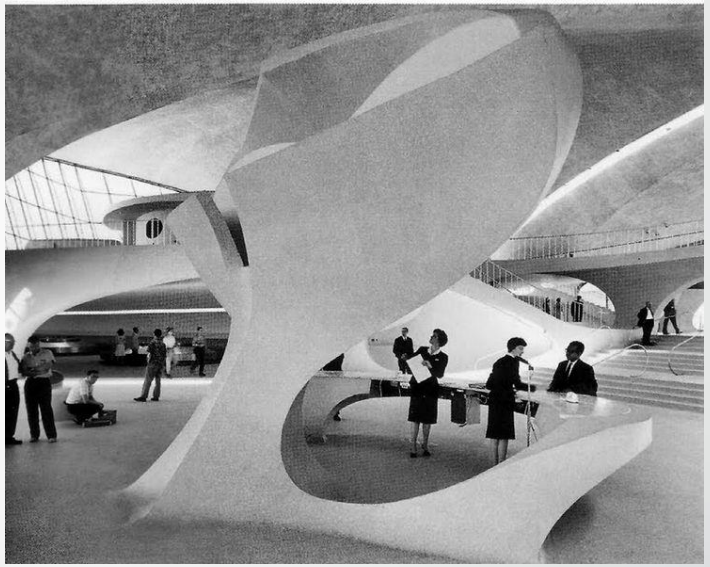

# Details

- The continues ceiling serve as a wall and also become a floor

- This structure has four continues parts that extend out from the center of the building.

# Details

- The large glass that is underneath the concrete is also supported by the steel. As the large glass wall extend out in an angle as it meet the ceiling. The large glass allow the natural light come inside the building.

# Systems strengths and weakness

## Pro

- It resist load through its natural curvature
- The weight of the structure transfer from roof to the foundation

## Concrete/ Steel

- Flexible and adaptable to any use
- Strong in compression (concrete)
- Strong in tension (steel)
- Curve allow to have pure tension
- Fire resistance, durable
- Use of concrete allow to build complex curve
- In modern time, it allow to have steel reinforcement concrete (it makes the structure more stronger and stable)

# Systems strengths and weakness

Con

- Concrete- no tensile strength
- Steel- not good in compression
- If the roof has problem with sealing and doesn't get fixed then the rain water can get through roof and leak into the building
- It will weaken the structure

# Architectural finishes available

- Texture of nature concrete is dull, gray.
- By the use of form liner, the color of concrete can be change.